STANDARDS CODE	CIRCUIT AND PACKAGING STANDARD		SYM	DATE	CHANGE NO	TECH APPRO	SYM	DATE	CHANGE NO	TECH APPRO	DEVELOPMENT NO	Q/M
2-7045				7-7-65	DV517Ø1							
CARD CODE	APPROVAL	DATE										
4483	GHM	7-7-65									58Ø4483	

SHEET 4 OF 1

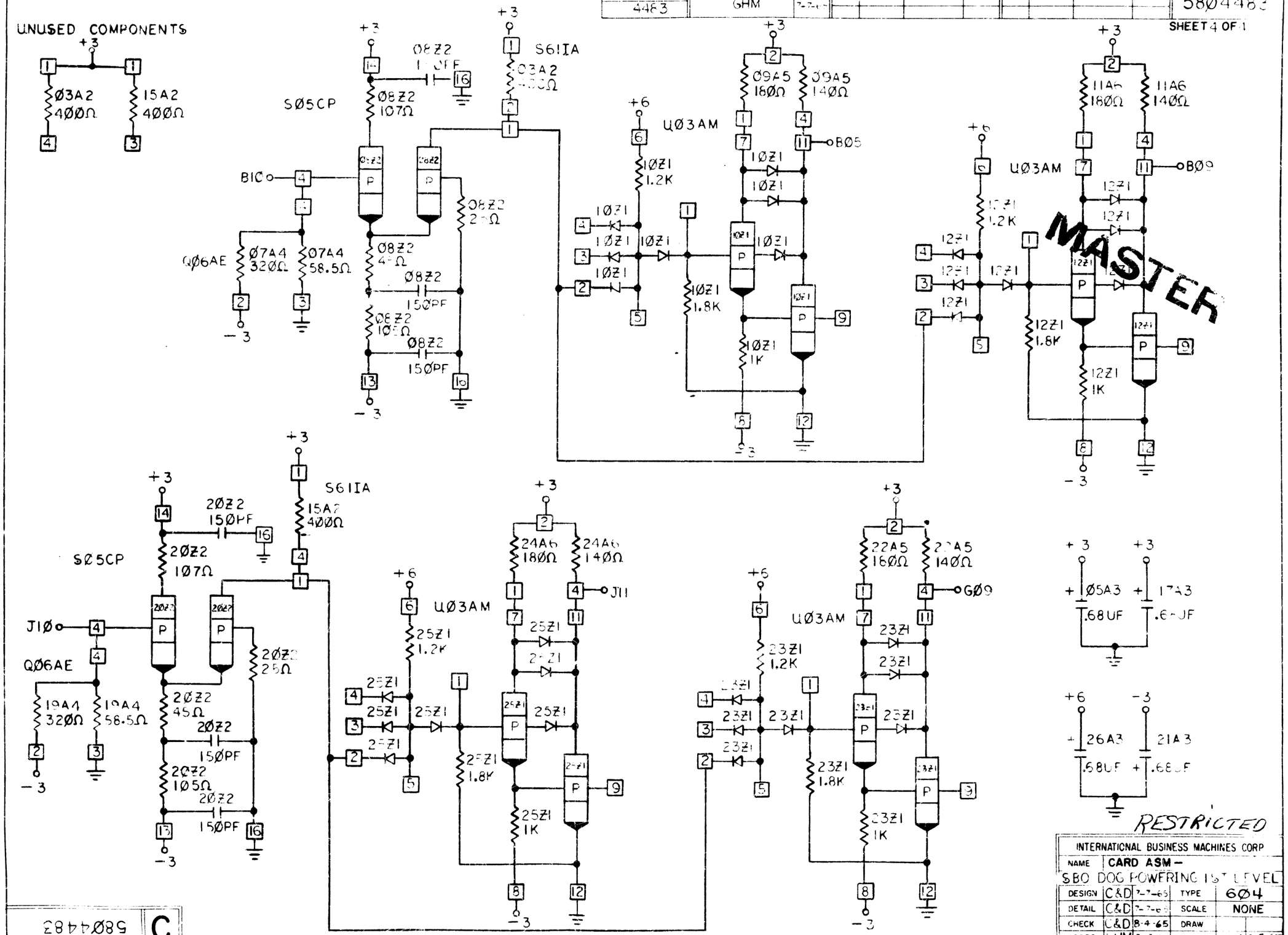

RESTRICTED

INTERNATIONAL BUSINESS MACHINES CORP				
NAME	CARD ASM – SBO DOG POWERING 1ST LEVEL			
DESIGN	C&D	7-7-65	TYPE	6Ø4
DETAIL	C&D	7-7-65	SCALE	NONE
CHECK	C&D	8-4-65	DRAW	
APPRO	GHM	7-7-65	CHECK	JEM 8-4-65

C 58Ø4483