STANDARDS CODE	CIRCUIT AND PACKAGING STANDARD		SYM	DATE	CHANGE NO.	TECH APPRO	SYM	DATE	CHANGE NO.	TECH APPRO	DEVELOPMENT NO.	Q/M
2-7046				9-30-64	[illegible]							
CARD CODE	APPROVAL	DATE		4-5-65	1636 [illegible]						5804487	
4487	G. H. M.	3-10-65		6-11-65	1643 [illegible]						SHEET 3 OF 3	

RESTRICTED

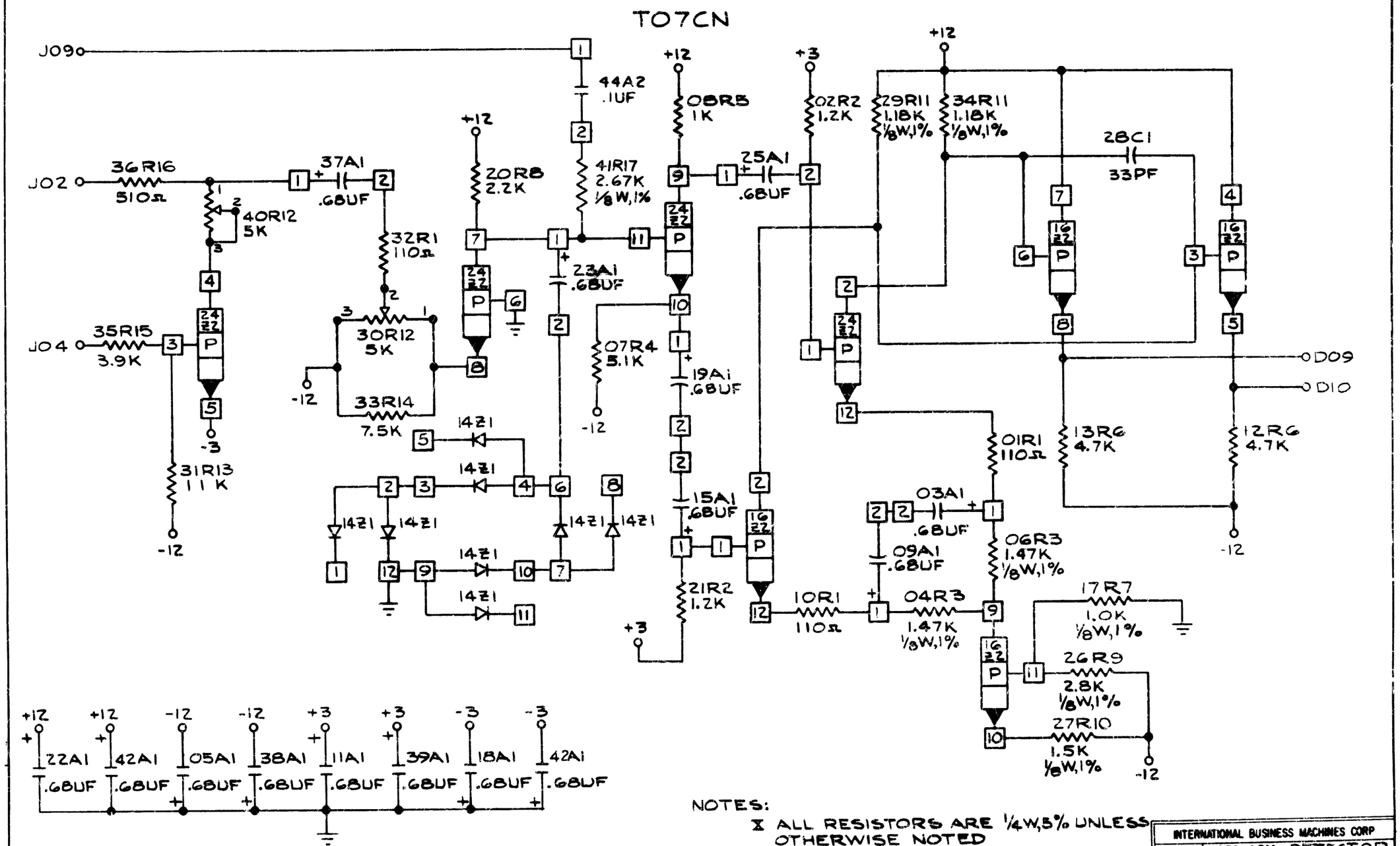

NOTES:

X ALL RESISTORS ARE 1/4W,5% UNLESS OTHERWISE NOTED

INTERNATIONAL BUSINESS MACHINES CORP				
NAME	CARD ASM-DETECTOR AMPLIFIER II			
DESIGN	CDA	9-16-64	TYPE	2802
DETAIL	CDA	9-16-64	SCALE	NONE
CHECK	CDA	9-16-64	DRAW	
APPRO	G.H.M.	3-10-65	CHECK	WM 9-17-64

C 5804487