STANDARDS CODE	CIRCUIT AND PACKAGING STANDARD		SYM	DATE	CHANGE NO.	TECH APPRO	SYM	DATE	CHANGE NO.	TECH APPRO	DEVELOPMENT NO	Q/M
2-7045				1-2-66	DEV 395.1							
CARD CODE	APPROVAL	DATE		1-26-65	1/26 [illegible]							
4488	G.H.M.	2-22-65									5804488	

SHEET 3 OF 3

RESTRICTED

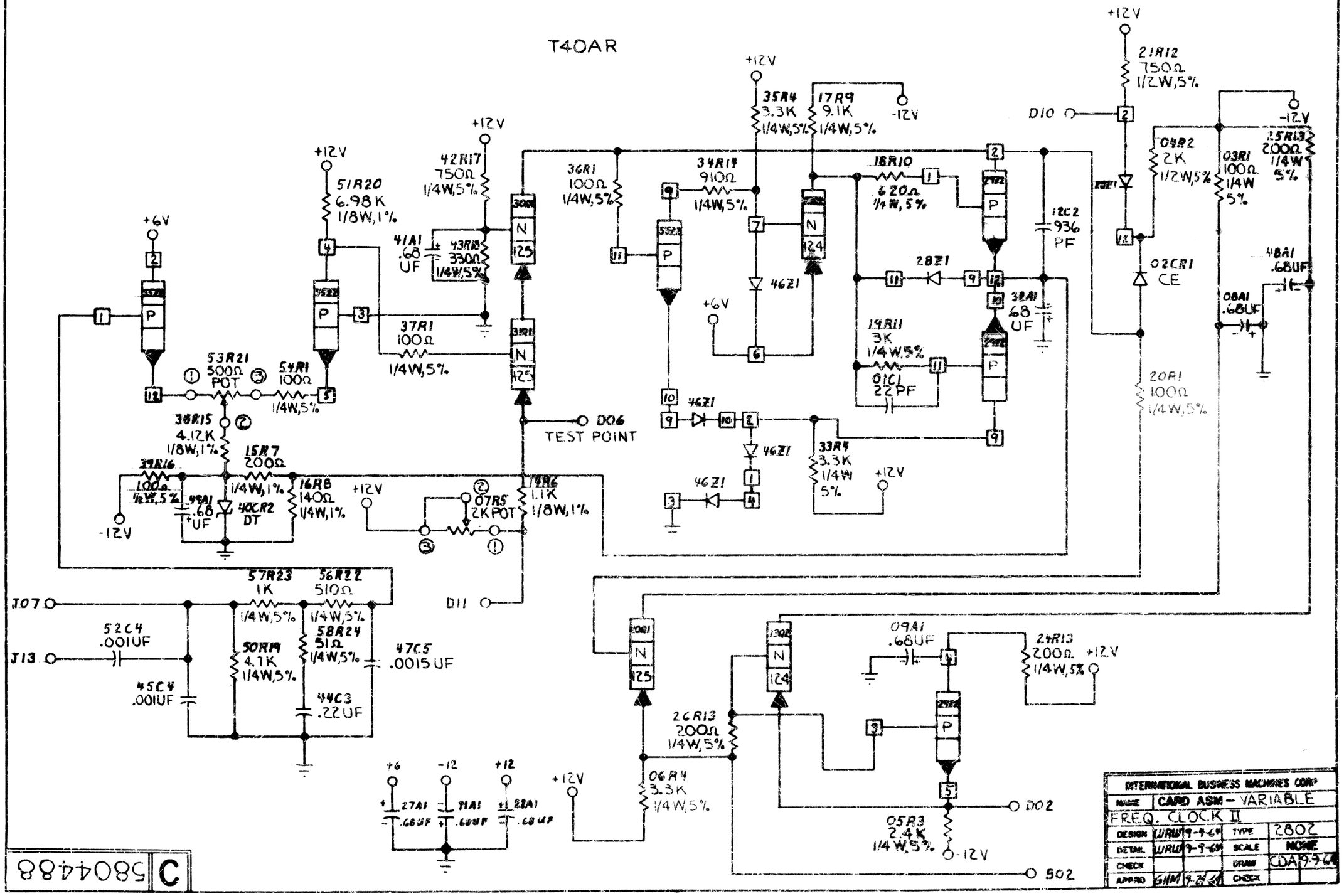

INTERNATIONAL BUSINESS MACHINES CORP				
NAME	CARD ASM - VARIABLE FREQ. CLOCK II			
DESIGN	WRW	9-9-64	TYPE	2802
DETAIL	WRW	9-9-64	SCALE	NONE
CHECK			DRAWN	CDA 9-9-64
APPRO	GHM	9-9-64	CHECK	

C 5804488

JAB 9-9-64