STANDARDS CODE	CIRCUIT AND PACKAGING STANDARD		SYM	DATE	CHANGE NO.	TECH APPRO	SYM	DATE	CHANGE NO.	TECH APPRO	DEVELOPMENT NO.	Q/M
2-7045				10-5-64	DEV 3955							
CARD CODE	APPROVAL	DATE		1-11-65	DEV 4275							
4489	G. H. M	12-14-64		3-31-65	163581A						5804489	

RESTRICTED

SHEET 4 OF 7

RESTRICTED

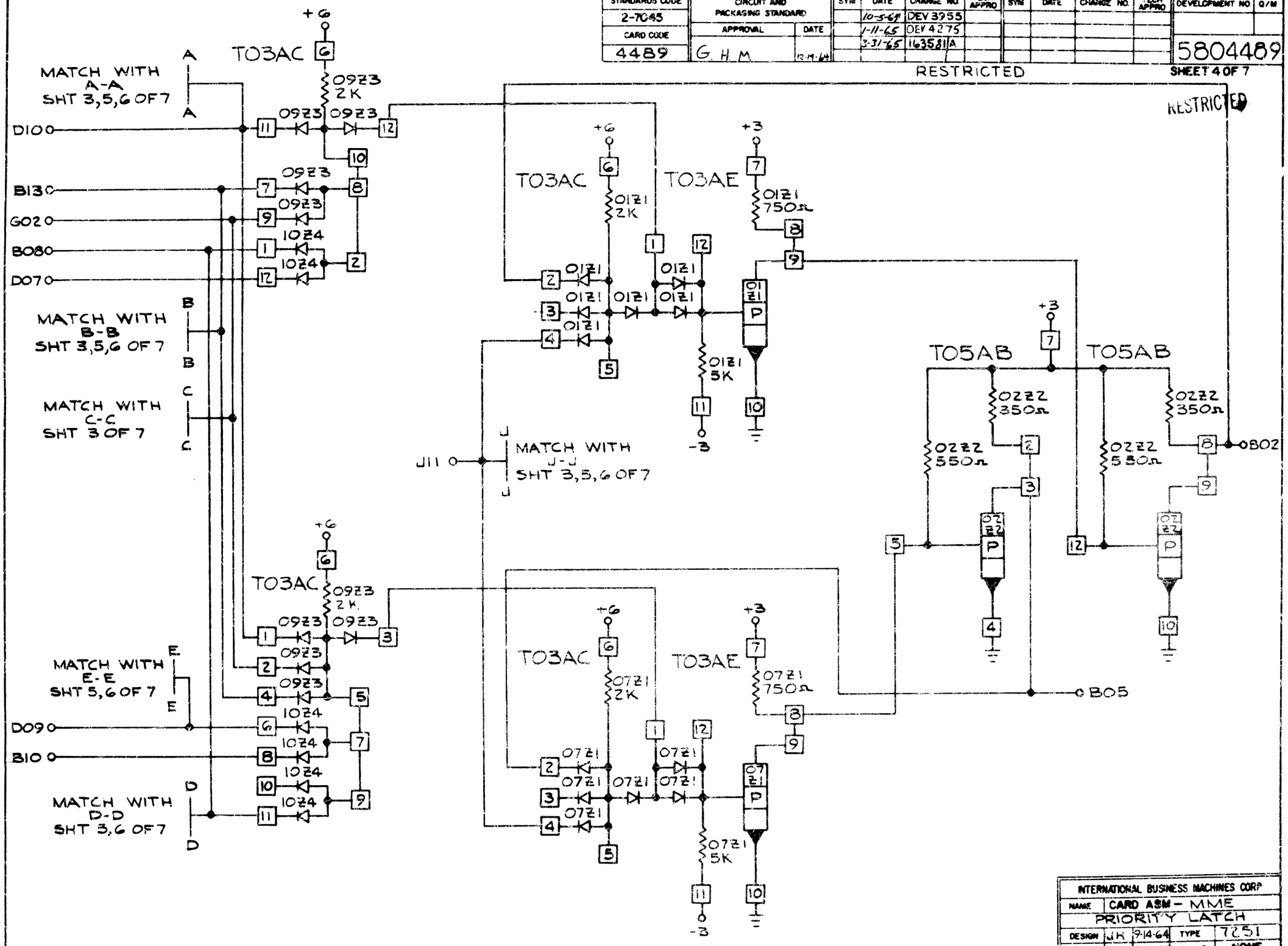

INTERNATIONAL BUSINESS MACHINES CORP				
NAME	CARD ASM - MME PRIORITY LATCH			
DESIGN	JH	9-14-64	TYPE	7251
DETAIL	CDA	9-23-64	SCALE	NONE
CHECK	CDA	9-25-64	DRAW	CDA 9-28-64
APPRO	GHM	10-7-64	CHECK	JH 9-28-64

C 5804489