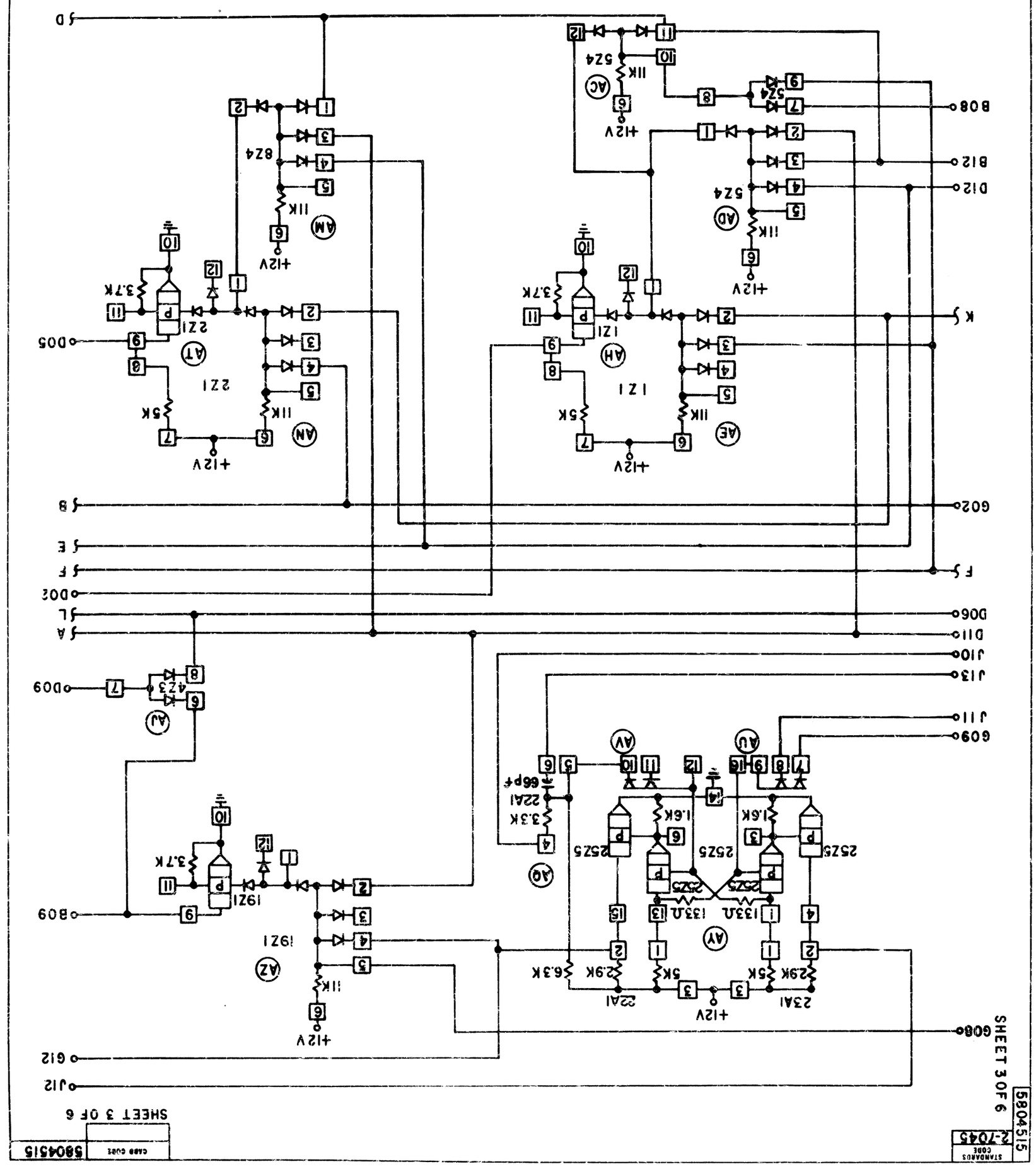
INTERNATIONAL BUSINESS MACHINES CORP.
NAME 2741 LINE CONTROL-1
DATE 6-4-65
CHANGE NO. 162495
A
APPROVAL
DATE
CHANGE NO. 164306
B
APPROVAL
DEVELOPMENT NO.
5804515
CIRCUIT AND PACKAGING STANDARD
APPROVAL
DATE
SHEET 3 OF 6
CASE CODE
5804515
STANDARDS CODE
2-7045
SHEET 3 OF 6
5804515
+12V
+12V
+12V