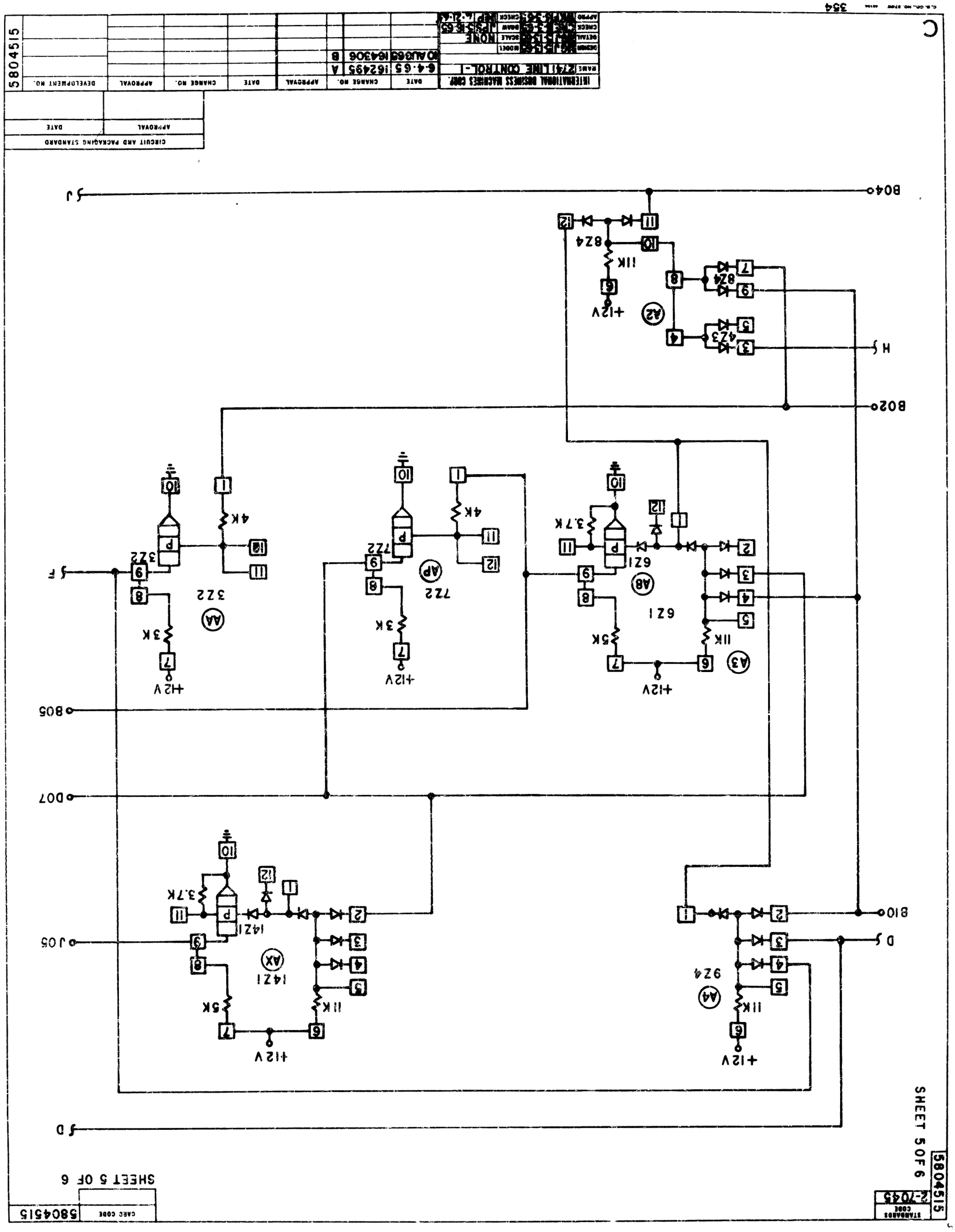
INTERNATIONAL BUSINESS MACHINES CORP.
NAME 2741 LINE CONTROL-I
6-4-65 1624 95 A
10 AUG 65 1643 06 B
5804515
SHEET 5 OF 6
CIRCUIT AND PACKAGING STANDARD
APPROVAL
DATE
CHANGE NO.
DEVELOPMENT NO.
CARE CODE
STANDARDS CODE
2-7045
+12V
A3
A4
A8
AA
AP
AX
A2
6Z1
9Z4
3Z2
7Z2
14Z1
8Z4
4Z3
B02
B04
B05
B07
B10
J05
J D
J F
J H
J J