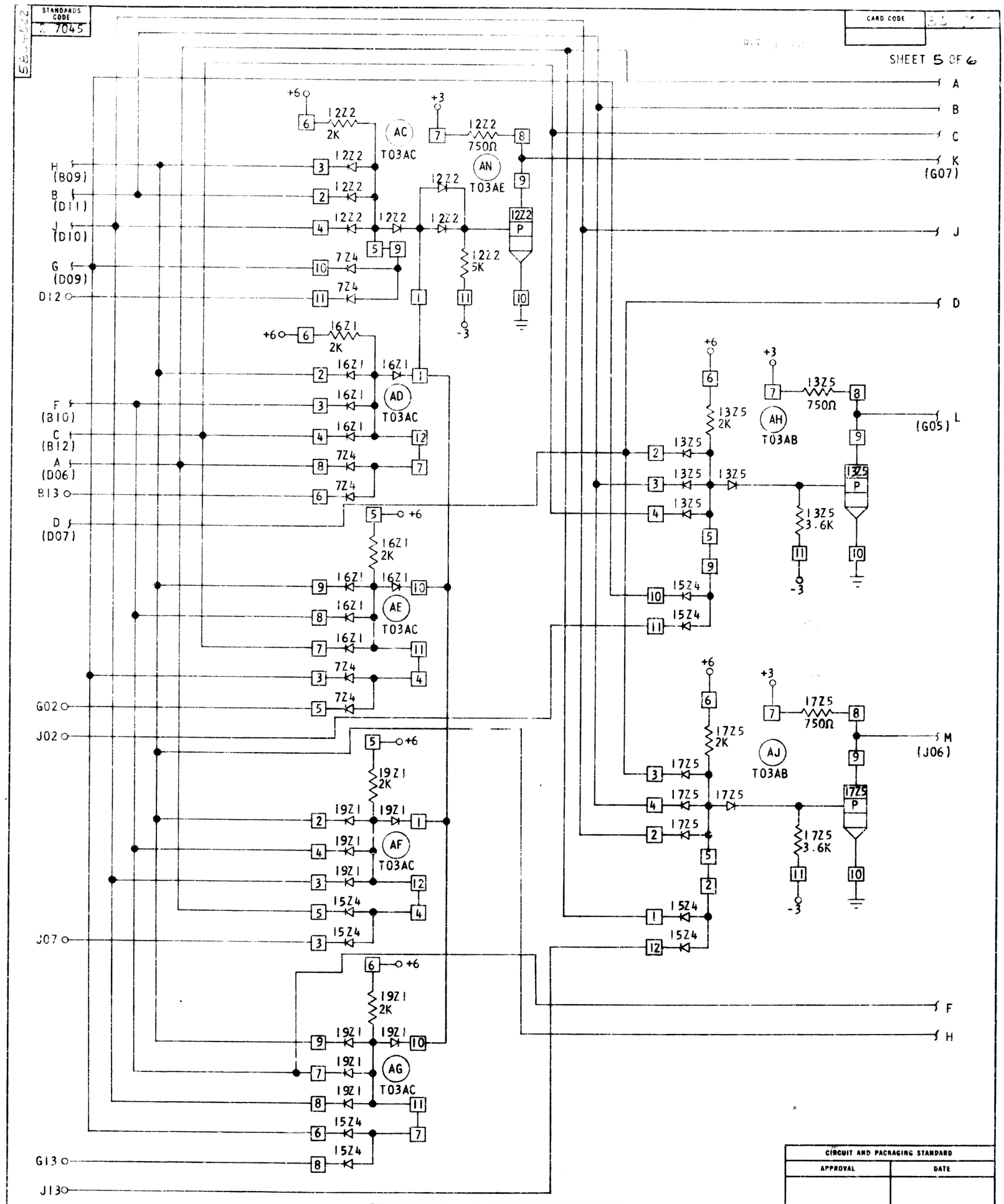

CIRCUIT AND PACKAGING STANDARD	
APPROVAL	DATE

INTERNATIONAL BUSINESS MACHINES CORP.					DATE	CHANGE NO.	APPROVAL	DATE	CHANGE NO.	APPROVAL	DEVELOPMENT NO.
NAME	4-BIT GATED DECODE				6-3-64	DEV3349					SE399
					12-4-64	162321					
DESIGN		MODEL			28FEB67	169826 B					
DETAIL	JMKH-1963	SCALE	NONE								
CHECK	PEH 11-22-63	DRAW	MDE 12-19-63								
APPRO		CHECK	TH 12-30-63								

5804522

C

C. B. CO., NO 2749