STANDARDS CODE 2-7045

5804539

CARD CODE 5804539

SHEET 6 OF 7

SHEET 6 OF 7
RESTRICTED *

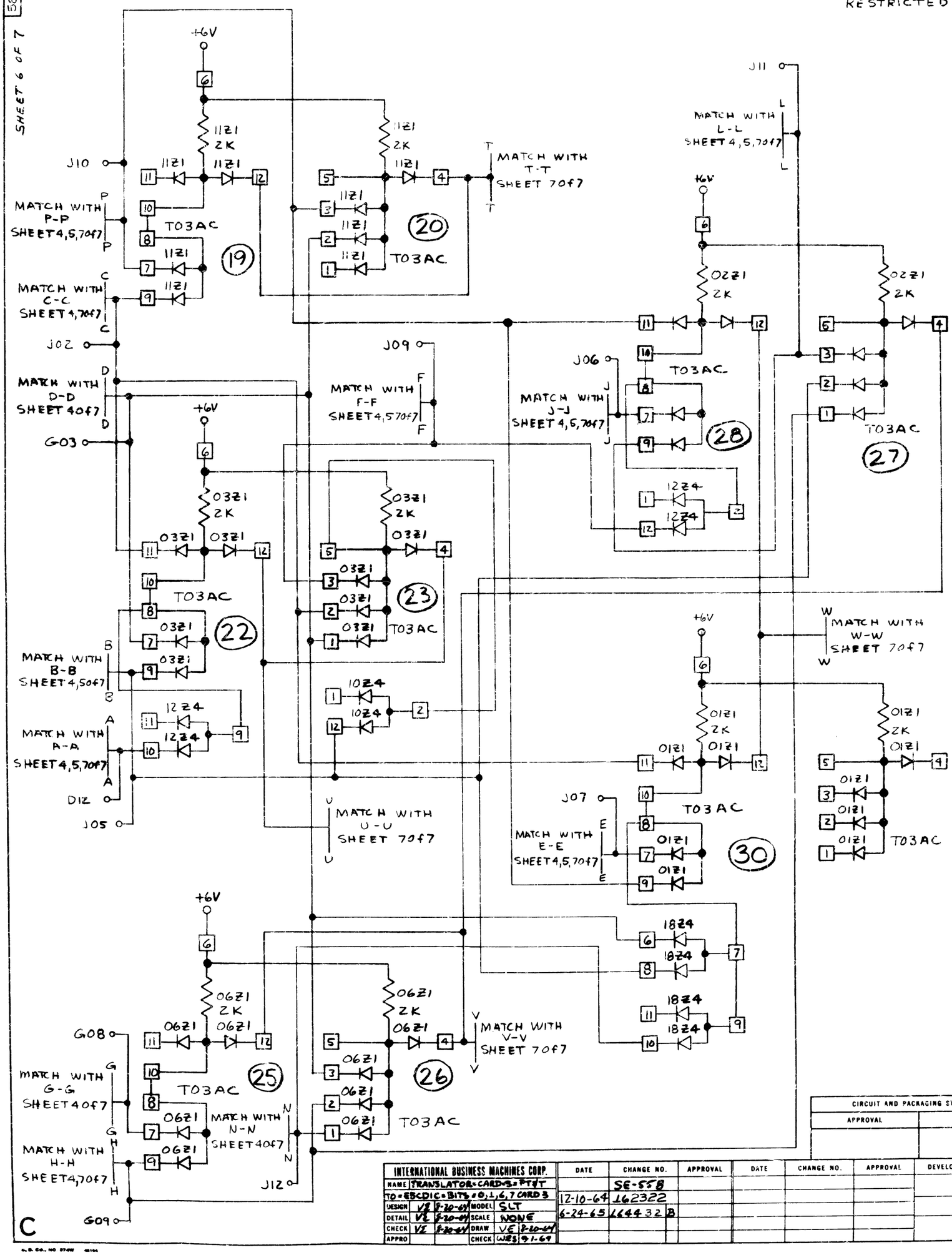

CIRCUIT AND PACKAGING STANDARD	
APPROVAL	DATE

INTERNATIONAL BUSINESS MACHINES CORP.						DATE	CHANGE NO.	APPROVAL	DATE	CHANGE NO.	APPROVAL	DEVELOPMENT NO.
NAME	TRANSLATOR-CARD-3-PT&T						SE-558					
TO-EBCDIC-BITS-0,1,6,7 CARD 3						12-10-64	162322					
DESIGN	VE	8-20-64	MODEL	SLT		6-24-65	164432	B				
DETAIL	VE	8-20-64	SCALE	NONE								
CHECK	VE	8-20-64	DRAW	VE	8-20-64							
APPRO			CHECK	WES	9-1-64							

5804539

C