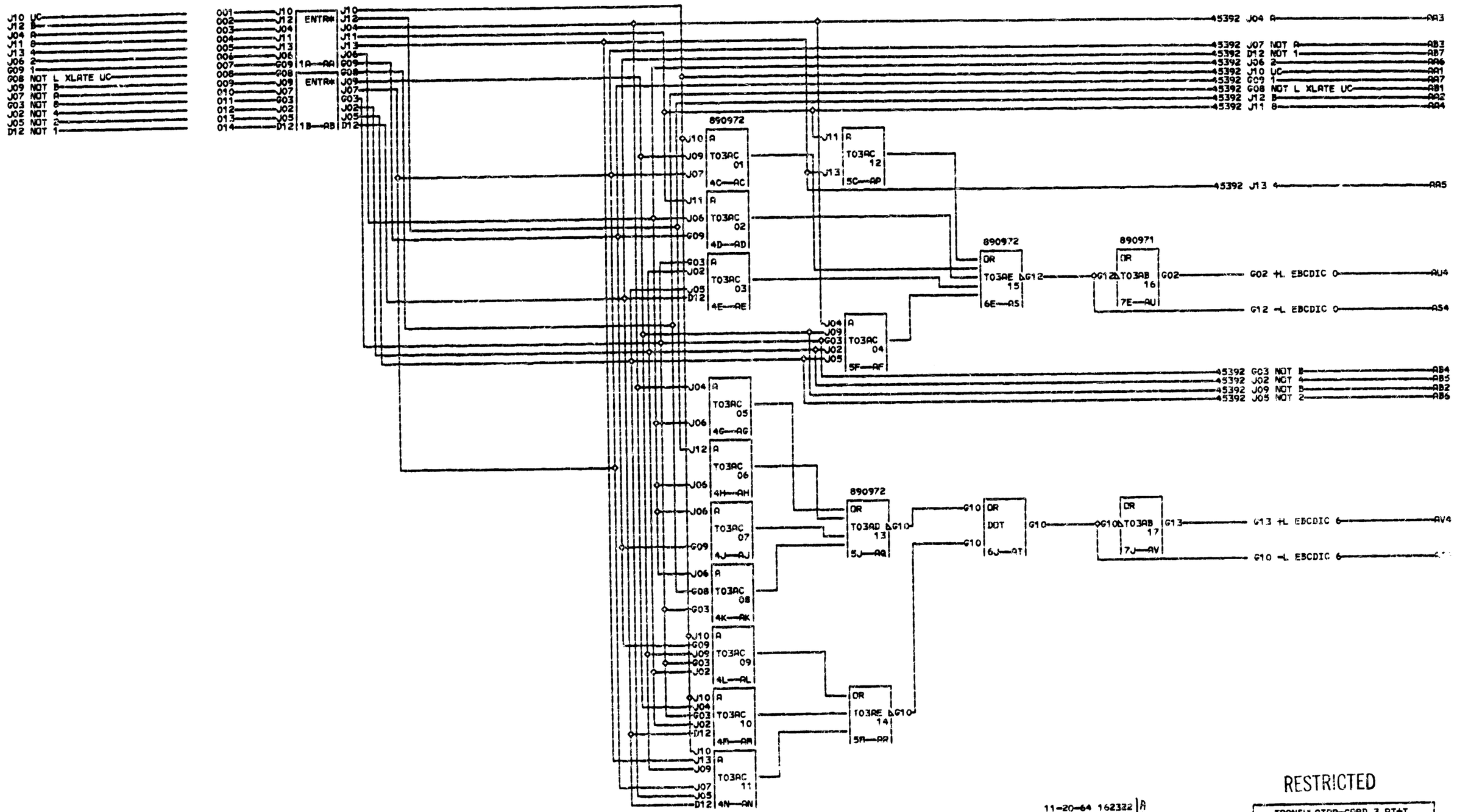

RESTRICTED

CARD SIZE◊ 2-24 PAC T65
VOLTAGE PINS
4 +3V◊D03◊J03 GND◊D08◊J08
5 +6V◊B11◊G11 -3V◊B06◊C06
3 SPECIAL RESTRICTED
9
1

000

11-20-64 162322 A
05-13-65 164432 B

TRANSULATOR-CARD 3 PT+T
TO EBCDIC BITS 001◊607 CARD-3
DATE 05-14-65 MACH. ASSEMBLY
LOG 1213 FRAME
FREDERICKSON P.N. 5804539
IBM CORP. ED BLK. RW

4 5 3 9 1 000