STANDARDS CODE 2-7045

CARD CODE 5804539

5804539

SHEET 4 OF 7

SHEET 4 OF 7
RESTRICTED *

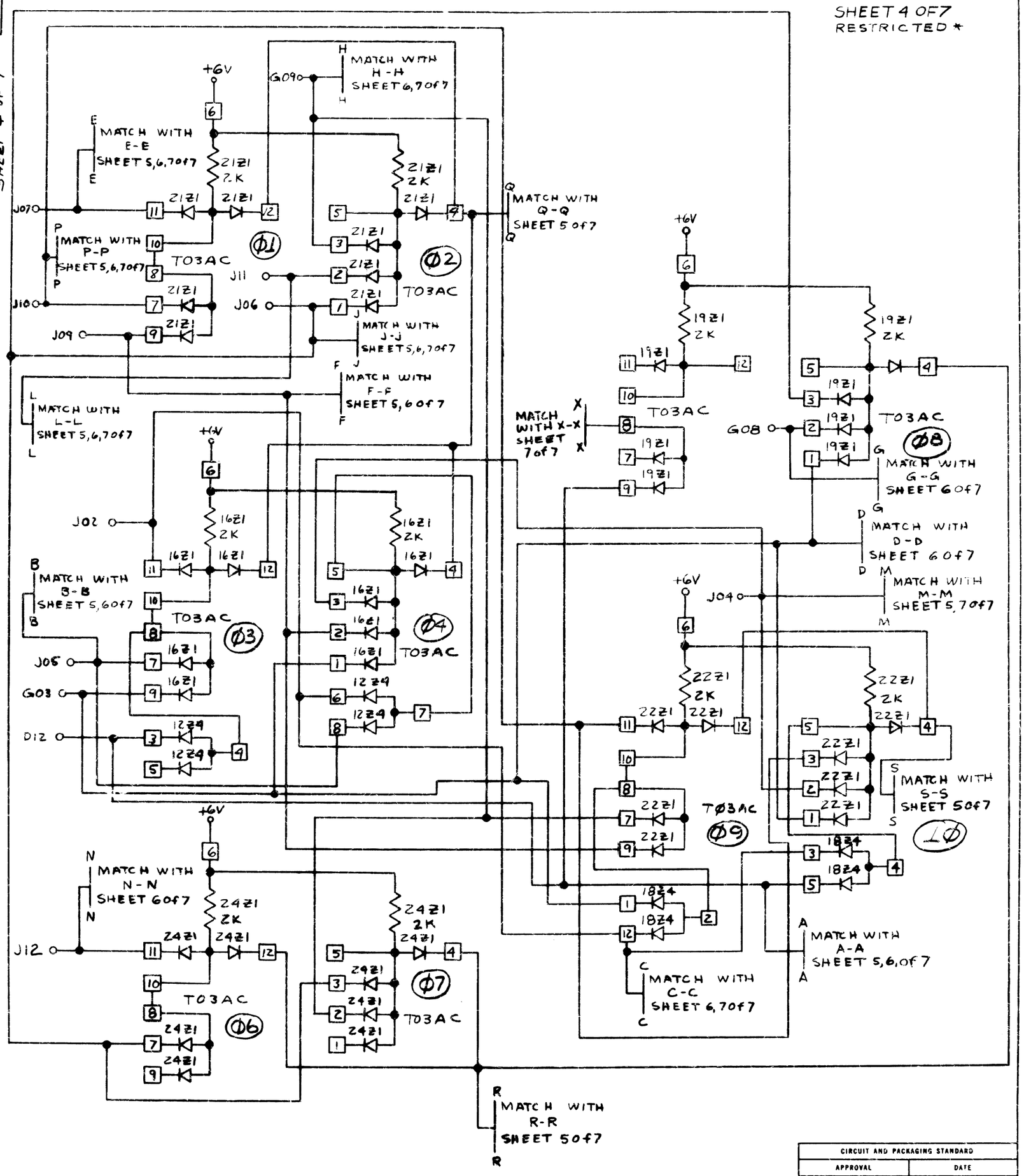

CIRCUIT AND PACKAGING STANDARD	
APPROVAL	DATE

INTERNATIONAL BUSINESS MACHINES CORP.						DATE	CHANGE NO.	APPROVAL	DATE	CHANGE NO.	APPROVAL	DEVELOPMENT NO.
NAME	[redacted] TO						SE-558					
[redacted] > CARD 3						12-10-64	162322					
DESIGN	VE	[redacted]	MODEL	SLT		6-24-65	164432	B				
DETAIL	VE	[redacted]	SCALE	NONE								
CHECK	VE	8-20-64	DRAW	VE	8-20-64							
APPRO			CHECK	WRL	9-1-64							

5804539

C

C.B. CO., NO. 3746 48-66

FORM 88 001