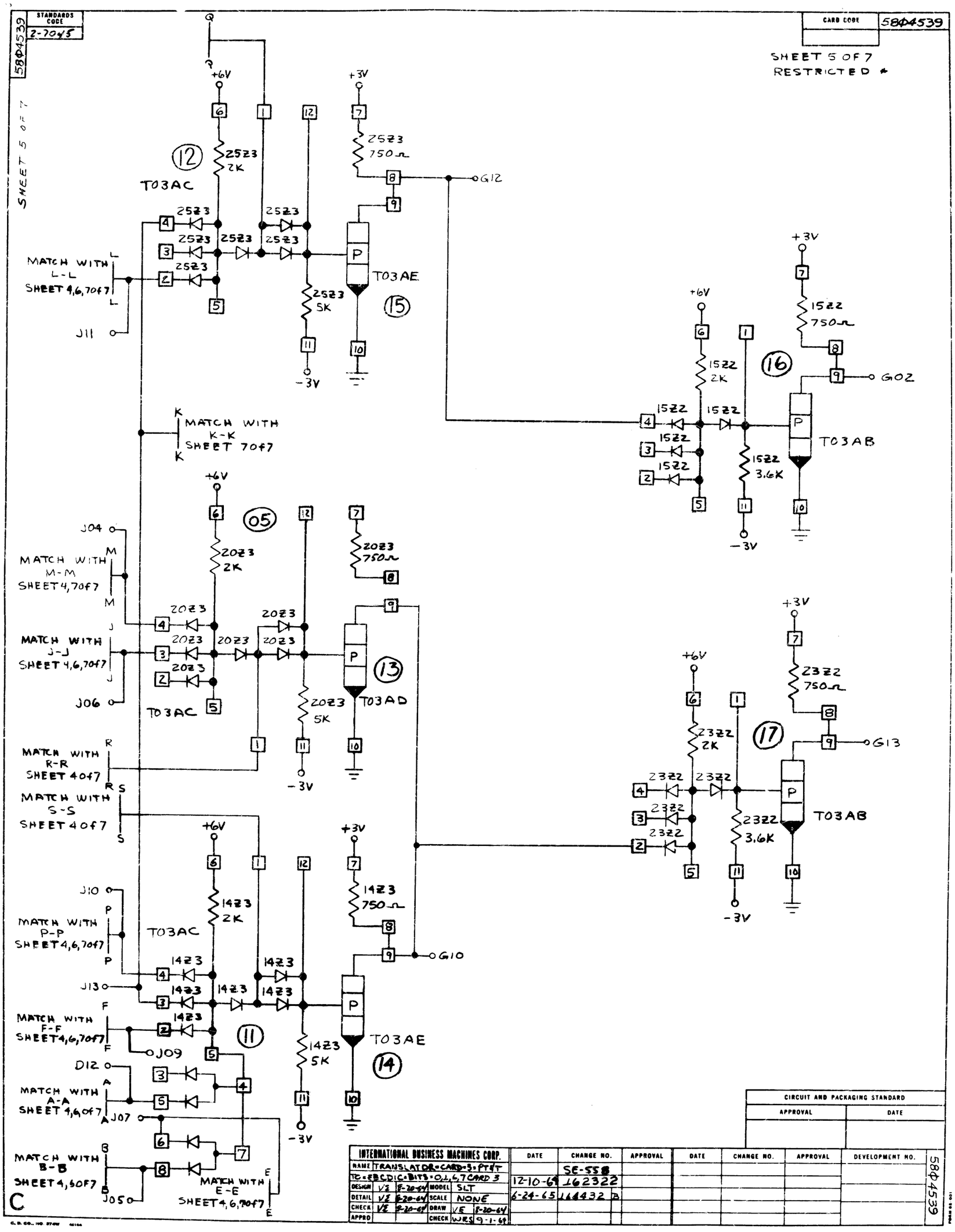
STANDARDS CODE
2-7045
58Φ4539
CARD CODE
58Φ4539
SHEET 5 OF 7
RESTRICTED *
SHEET 5 OF 7
+6V
+3V
-3V
2523 2K
2523 750Ω
2523 5K
T03AC
T03AE
G12
MATCH WITH L-L SHEET 4,6,7 of 7
J11
MATCH WITH K-K SHEET 7 of 7
1522 2K
1522 750Ω
1522 3.6K
T03AB
G02
J04
MATCH WITH M-M SHEET 4,7 of 7
J06
MATCH WITH J-J SHEET 4,6,7 of 7
2023 2K
2023 750Ω
2023 5K
T03AD
MATCH WITH R-R SHEET 4 of 7
MATCH WITH S-S SHEET 4 of 7
2322 2K
2322 750Ω
2322 3.6K
G13
J10
MATCH WITH P-P SHEET 4,6,7 of 7
J13
MATCH WITH F-F SHEET 4,6,7 of 7
J09
1423 2K
1423 750Ω
1423 5K
G10
D12
MATCH WITH A-A SHEET 4,6 of 7
J07
MATCH WITH B-B SHEET 4,6 of 7
J05
MATCH WITH E-E SHEET 4,6,7 of 7
C
CIRCUIT AND PACKAGING STANDARD
APPROVAL
DATE
INTERNATIONAL BUSINESS MACHINES CORP.
NAME TRANSLATOR-CARD-3-PT&T
TC-EBCDIC-BITS-0,1,6,7 CARD 3
DESIGN VE 8-20-64 MODEL SLT
DETAIL VE 8-20-64 SCALE NONE
CHECK VE 8-20-64 DRAW VE 8-20-64
APPRO CHECK WRS 9-1-69
DATE CHANGE NO. APPROVAL
SE-558
12-10-69 162322
6-24-65 164432 B
DEVELOPMENT NO.
58Φ4539