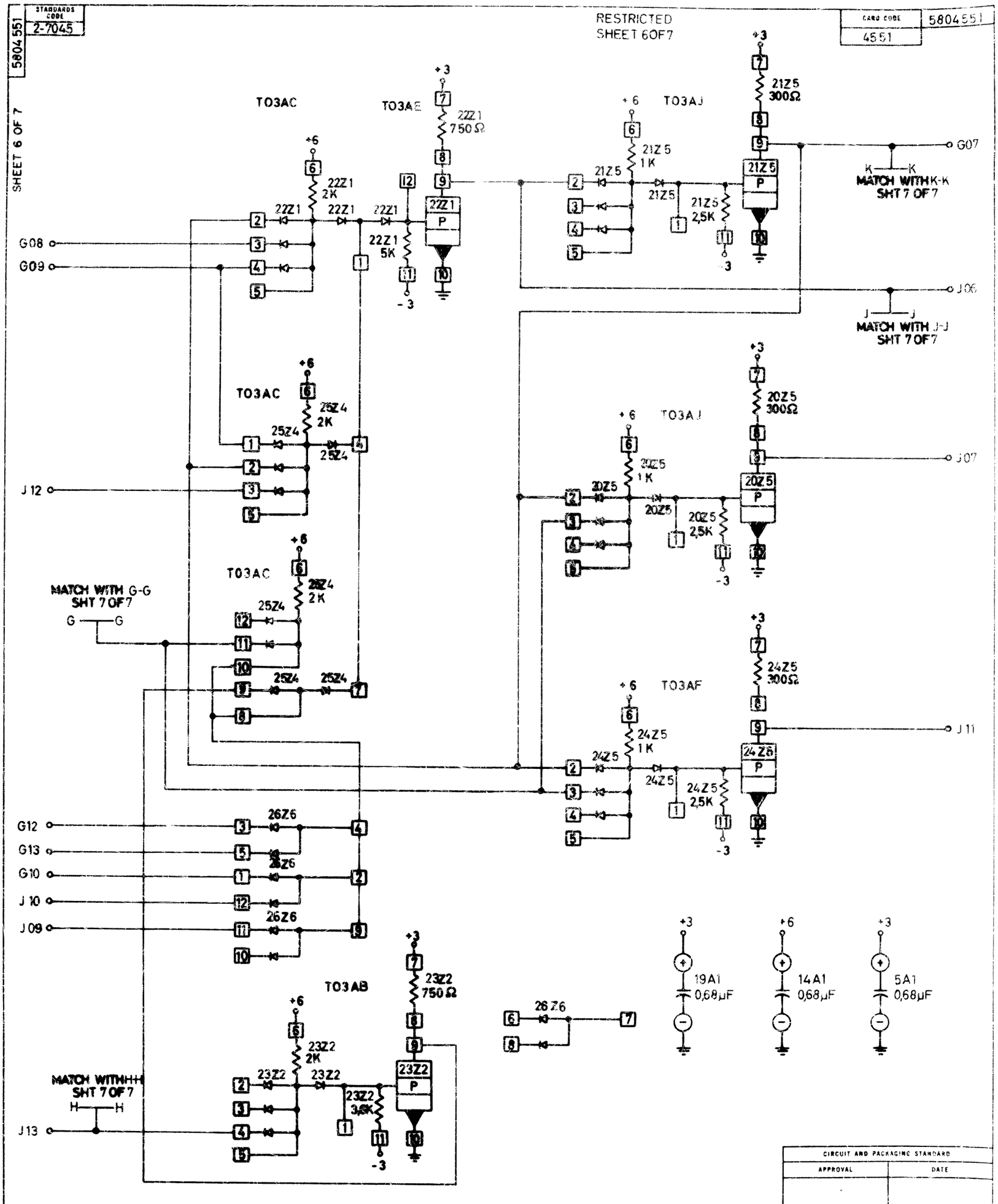
STANDARDS CODE 2-7045
5804551
SHEET 6 OF 7
RESTRICTED
SHEET 6 OF 7
CARD CODE 4551
5804551
TO3AC
TO3AE
TO3AJ
TO3AF
TO3AB
+3
+6
-3
22Z1 750Ω
22Z1 2K
22Z1 5K
22Z1 P
21Z5 300Ω
21Z5 1K
21Z5 2,5K
21Z5 P
20Z5 300Ω
20Z5 1K
20Z5 2,5K
20Z5 P
24Z5 300Ω
24Z5 1K
24Z5 2,5K
24Z5 P
25Z4 2K
26Z6
23Z2 750Ω
23Z2 2K
23Z2 3,5K
23Z2 P
19A1 0,68μF
14A1 0,68μF
5A1 0,68μF
G08
G09
J 12
G12
G13
G10
J 10
J 09
J13
G07
J06
J07
J 11
MATCH WITH G-G SHT 7 OF 7
MATCH WITH K-K SHT 7 OF 7
MATCH WITH J-J SHT 7 OF 7
MATCH WITH H-H SHT 7 OF 7
CIRCUIT AND PACKAGING STANDARD
APPROVAL
DATE
INTERNATIONAL BUSINESS MACHINES CORP.
NAME MFCM LOGIC 4
DESIGN Koh 09-15-64
DETAIL Koh 09-15-64
CHECK
APPRO
MODEL 2020
SCALE NONE
DRAW
CHECK
DATE
CHANGE NO.
APPROVAL
09-28-64 160657
2-15-65 162616
DEVELOPMENT NO.
5804551
C