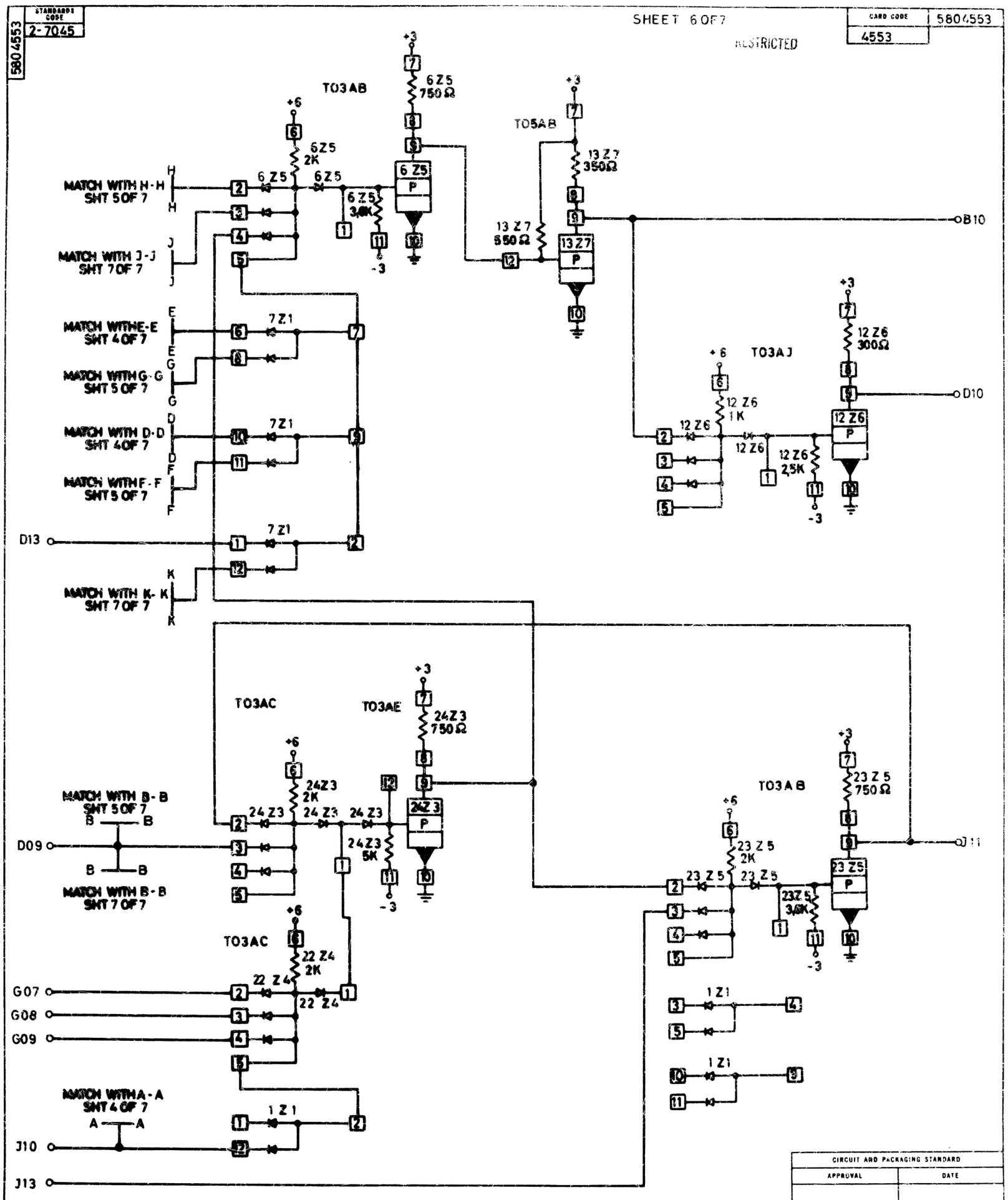
STANDARD CODE
2-7045
5804553
SHEET 6 OF 7
RESTRICTED
CARD CODE
4553
5804553
T03AB
6Z5
750Ω
6Z5
2K
6Z5
6Z5
6Z5
3.6K
MATCH WITH H-H
SHT 5 OF 7
MATCH WITH J-J
SHT 7 OF 7
MATCH WITH E-E
SHT 4 OF 7
MATCH WITH G-G
SHT 5 OF 7
MATCH WITH D-D
SHT 4 OF 7
MATCH WITH F-F
SHT 5 OF 7
MATCH WITH K-K
SHT 7 OF 7
7Z1
D13
T05AB
13Z7
350Ω
13Z7
550Ω
B10
T03AJ
12Z6
300Ω
12Z6
1K
12Z6
12Z6
12Z6
2.5K
D10
T03AC
T03AE
24Z3
750Ω
24Z3
2K
24Z3
24Z3
24Z3
24Z3
5K
MATCH WITH B-B
SHT 5 OF 7
MATCH WITH B-B
SHT 7 OF 7
D09
T03AB
23Z5
750Ω
23Z5
2K
23Z5
23Z5
23Z5
3.6K
J11
T03AC
22Z4
2K
22Z4
22Z4
G07
G08
G09
1Z1
MATCH WITH A-A
SHT 4 OF 7
J10
J13
CIRCUIT AND PACKAGING STANDARD
APPROVAL
DATE
INTERNATIONAL BUSINESS MACHINES CORP.
NAME MFCM LOGIC 6
DESIGN DEPT 8-8-64
DETAIL KEL 8-25-64
CHECK KL 8-26-64
APPRO 9-11-64
MODEL 2020
SCALE NONE
DRAW
CHECK
DATE
CHANGE NO.
APPROVAL
DATE
CHANGE NO.
APPROVAL
DEVELOPMENT NO.
09 04-64
160659
5804553
5804553
C