STANDARDS CODE 2-7045

5804561

SHEET 6 OF 6

CARD CODE 4561 | 5804561

RESTRICTED

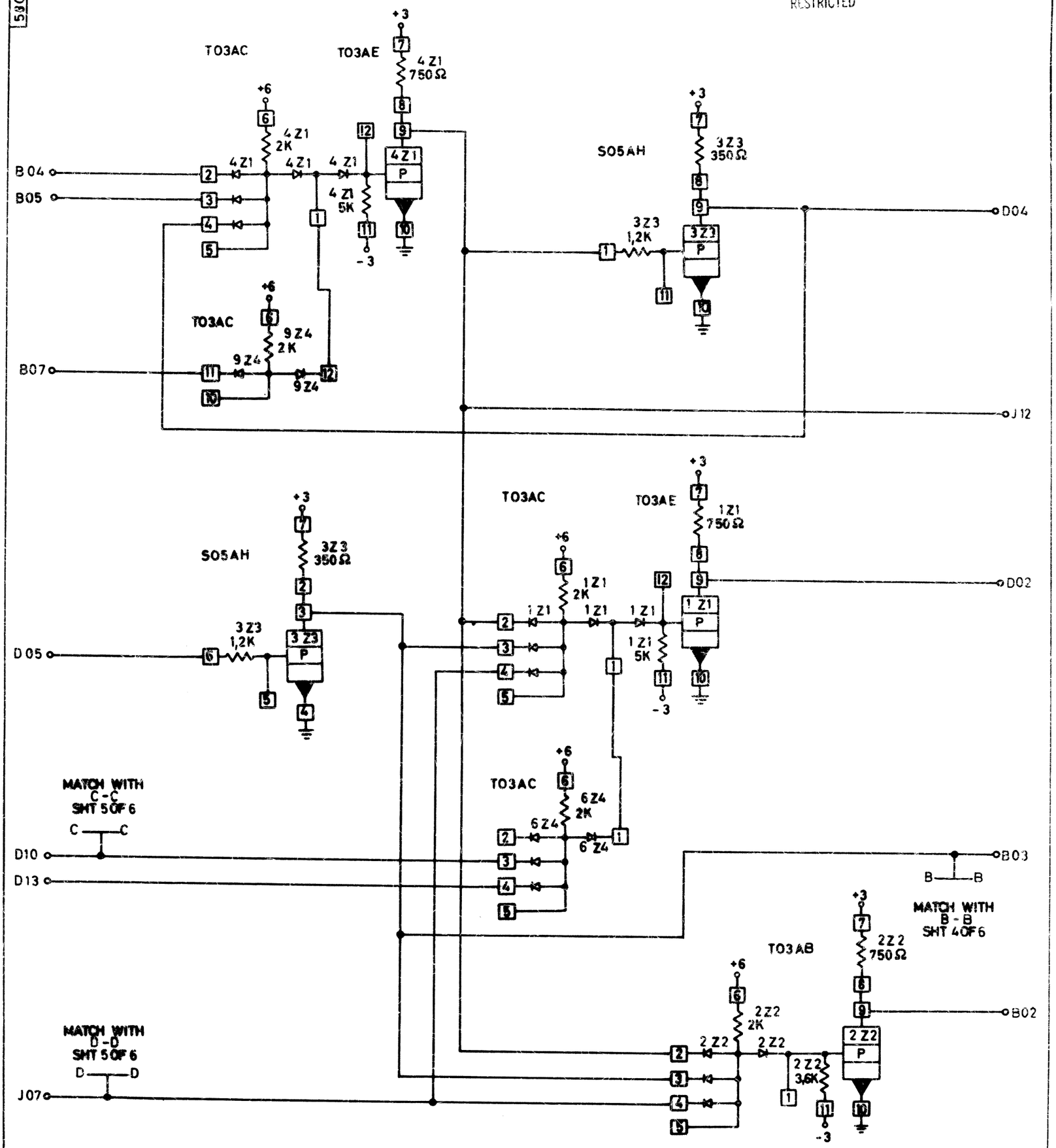

CIRCUIT AND PACKAGING STANDARD	
APPROVAL	DATE

INTERNATIONAL BUSINESS MACHINES CORP.					DATE	CHANGE NO.	APPROVAL	DATE	CHANGE NO.	APPROVAL	DEVELOPMENT NO.	5804561
NAME	DOC PRINTCTRL				09-07-64	160667						
DESIGN	DEPT	8-6-64	MODEL	2020	12-17-64	161782						
DETAIL	KEL	8-25-64	SCALE	NONE								
CHECK	KL	8-25-64	DRAW									
APPRO		10-1-64	CHECK								5804561	

C