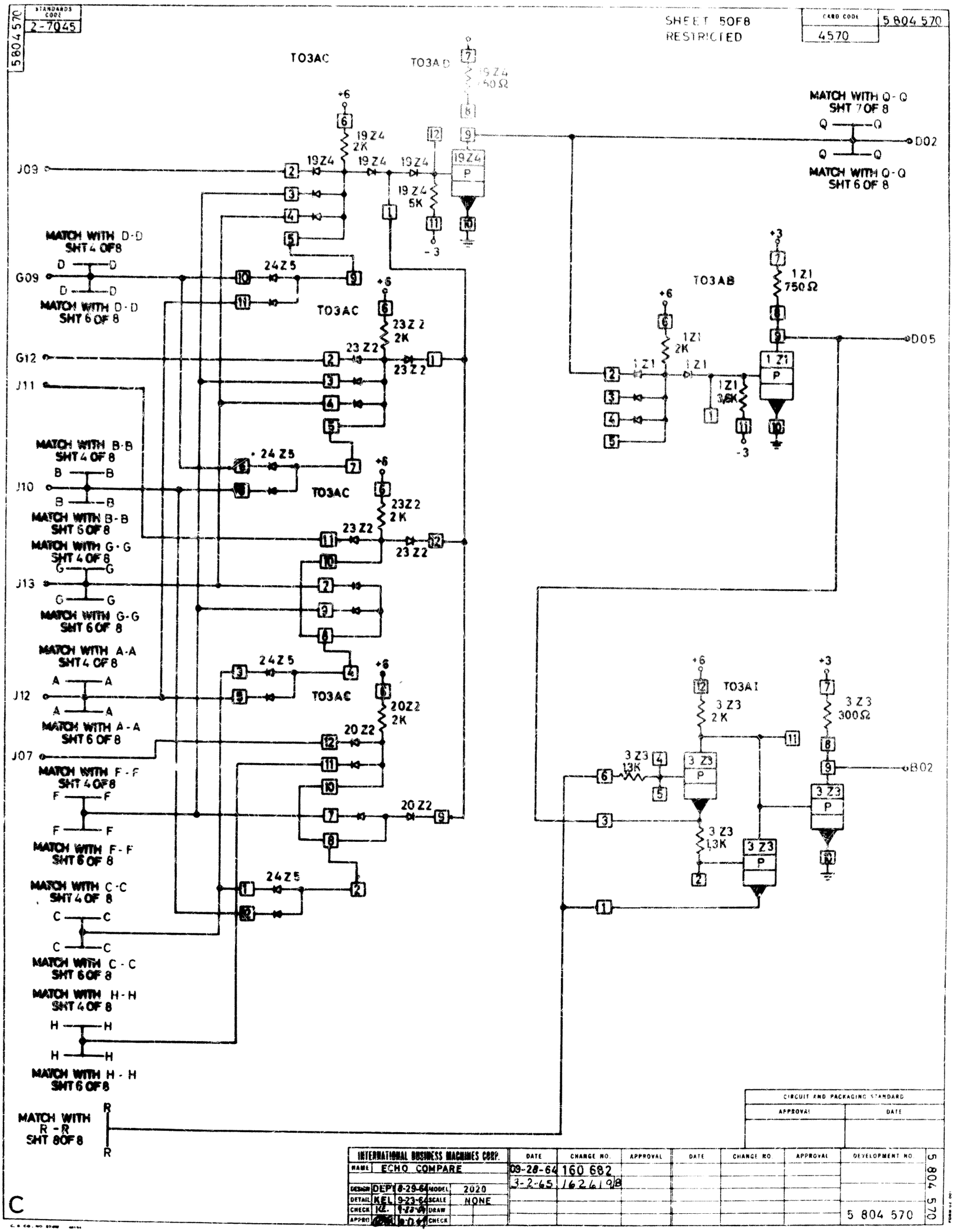
5804570
STANDARDS CODE 2-7045
SHEET 5 OF 8
RESTRICTED
CARD CODE 4570
5 804 570
TO3AC
TO3AD
19Z4 750Ω
+6
19Z4 2K
19Z4
19Z4 5K
-3
MATCH WITH Q-Q SHT 7 OF 8
Q — Q
D02
MATCH WITH Q-Q SHT 6 OF 8
J09
MATCH WITH D-D SHT 4 OF 8
D — D
G09
MATCH WITH D-D SHT 6 OF 8
24Z5
23Z2 2K
23Z2
G12
J11
TO3AB
+3
1Z1 750Ω
1Z1 2K
1Z1
1Z1 3.6K
D05
MATCH WITH B-B SHT 4 OF 8
B — B
J10
MATCH WITH B-B SHT 5 OF 8
MATCH WITH G-G SHT 4 OF 8
G — G
J13
MATCH WITH G-G SHT 6 OF 8
MATCH WITH A-A SHT 4 OF 8
A — A
J12
MATCH WITH A-A SHT 6 OF 8
20Z2 2K
20Z2
J07
MATCH WITH F-F SHT 4 OF 8
F — F
MATCH WITH F-F SHT 6 OF 8
MATCH WITH C-C SHT 4 OF 8
C — C
MATCH WITH C-C SHT 6 OF 8
MATCH WITH H-H SHT 4 OF 8
H — H
MATCH WITH H-H SHT 6 OF 8
MATCH WITH R-R SHT 8 OF 8
R — R
TO3AI
3Z3 2K
3Z3 1.3K
3Z3 300Ω
B02
CIRCUIT AND PACKAGING STANDARD
APPROVAL
DATE
INTERNATIONAL BUSINESS MACHINES CORP.
NAME ECHO COMPARE
DESIGN DEPT 8-29-64 MODEL 2020
DETAIL KEL 9-23-64 SCALE NONE
CHECK KL 9-23-64 DRAW
APPRO CHECK
DATE CHANGE NO. APPROVAL DATE CHANGE NO. APPROVAL DEVELOPMENT NO.
09-28-64 160 682
3-2-65 162619 8
5 804 570
C