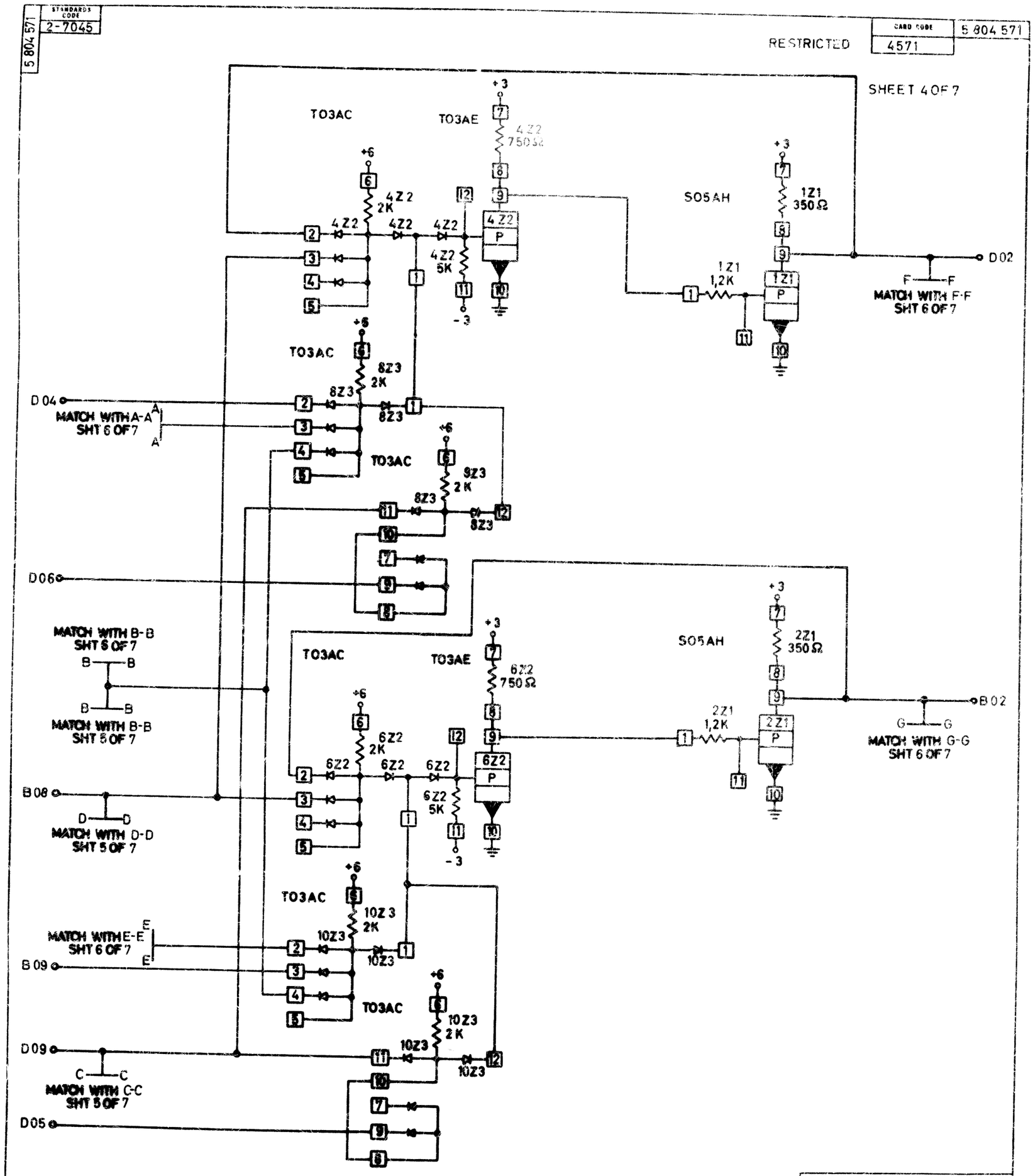

CIRCUIT AND PACKAGING STANDARD	
APPROVAL	DATE

INTERNATIONAL BUSINESS MACHINES CORP.					DATE	CHANGE NO.	APPROVAL	DATE	CHANGE NO.	APPROVAL	DEVELOPMENT NO.	5 804 571
NAME	ECHO				09-20-64	160 683						
DESIGN	Koh		MODEL	2020								
DETAIL	Koh		SCALE	NONE								
CHECK			DRAW								5 804 571	
APPRO			CHECK									

C