5 804 571

STANDARDS CODE 2-7045

CARD CODE 4571 | 5 804 571

RESTRICTED
SHEET 7 OF 7

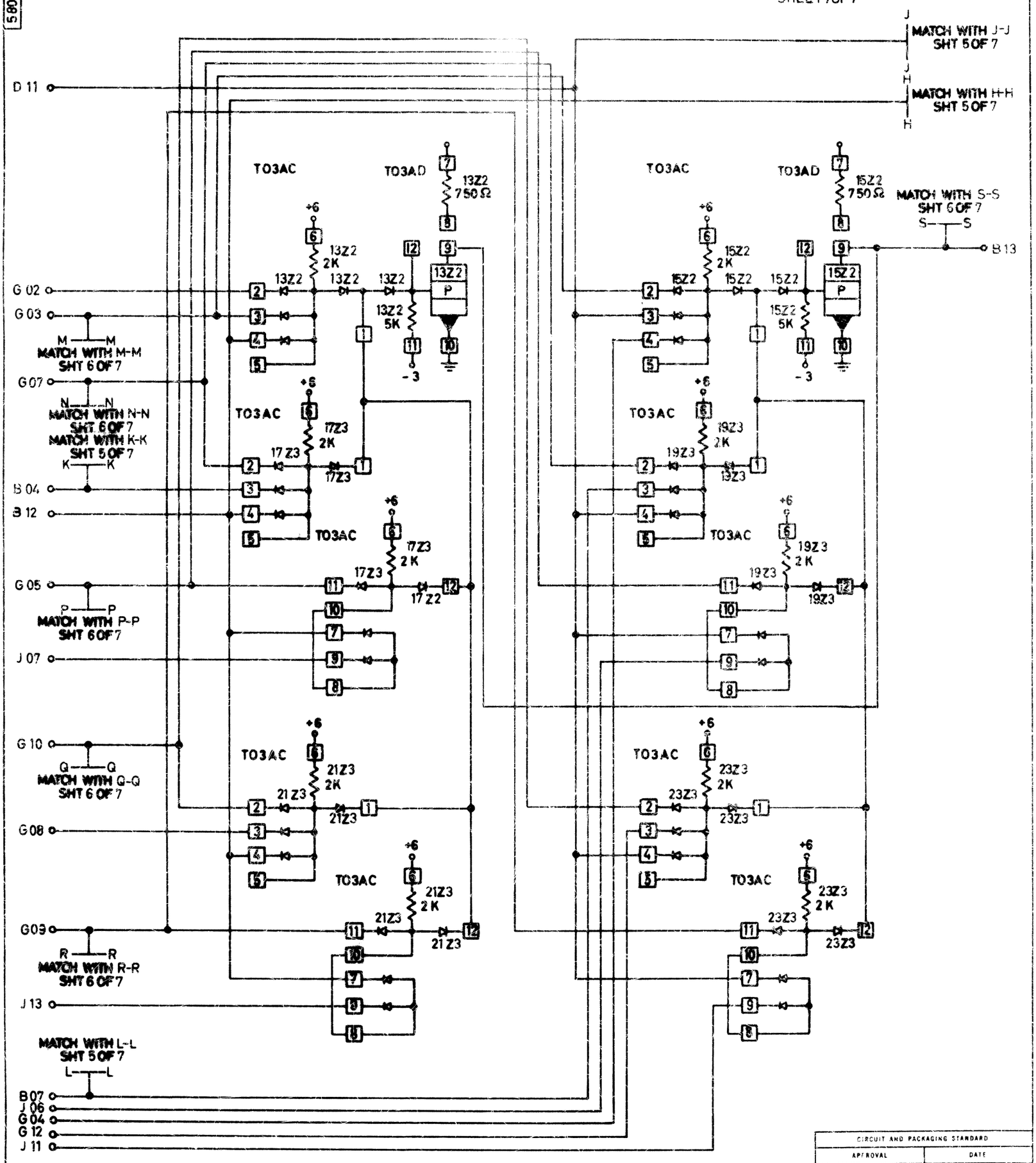

CIRCUIT AND PACKAGING STANDARD

APPROVAL	DATE

INTERNATIONAL BUSINESS MACHINES CORP.													
NAME	ECHO				DATE	CHANGE NO.	APPROVAL	DATE	CHANGE NO.	APPROVAL	DEVELOPMENT NO.	5 804 571
DESIGN	Koh	08-31-64	MODEL	2020	09-28-64	160683						
DETAIL	Koh	08-03-64	SCALE	NONE								
CHECK			DRAW								5 804 571	
APPRO			CHECK									

C