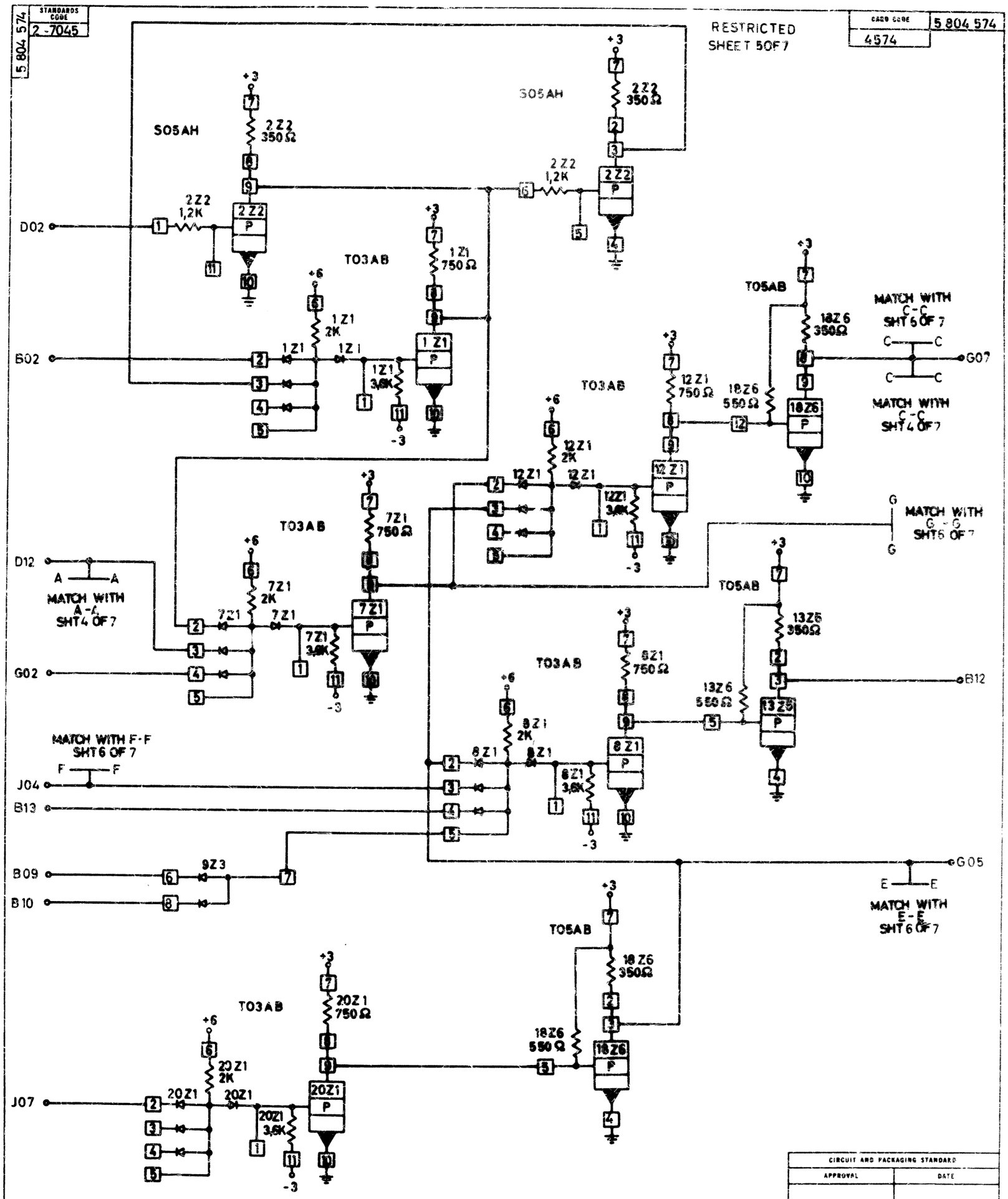
5 804 574
STANDARDS CODE
2-7045
RESTRICTED
SHEET 5 OF 7
CARD CODE
4574
5 804 574
S05AH
2Z2
350Ω
2Z2
1,2K
D02
T03AB
1Z1
750Ω
1Z1
2K
1Z1
3,6K
B02
T05AB
18Z6
350Ω
18Z6
550Ω
MATCH WITH
C-C
SHT 6 OF 7
G07
MATCH WITH
C-C
SHT 4 OF 7
12Z1
750Ω
12Z1
2K
12Z1
3,6K
MATCH WITH
G-G
SHT 5 OF 7
7Z1
750Ω
7Z1
2K
7Z1
3,6K
D12
A-A
MATCH WITH
A-A
SHT 4 OF 7
G02
13Z6
350Ω
13Z6
550Ω
B12
8Z1
750Ω
8Z1
2K
8Z1
3,6K
MATCH WITH F-F
SHT 6 OF 7
F-F
J04
B13
B09
B10
9Z3
G05
E-E
MATCH WITH
E-E
SHT 6 OF 7
20Z1
750Ω
20Z1
2K
20Z1
3,6K
J07
+3
+6
-3
C
CIRCUIT AND PACKAGING STANDARD
APPROVAL
DATE
INTERNATIONAL BUSINESS MACHINES CORP.
NAME CR CHECK
DESIGN KOH 9-9-64
DETAIL KEL. 9-21-64
CHECK 9-22-64
APPRO
MODEL 2020
SCALE NONE
DRAW
CHECK
DATE
CHANGE NO.
APPROVAL
DATE
CHANGE NO.
APPROVAL
DEVELOPMENT NO.
09-25-64 160 686
2-12-65 162628 B
5 804 574