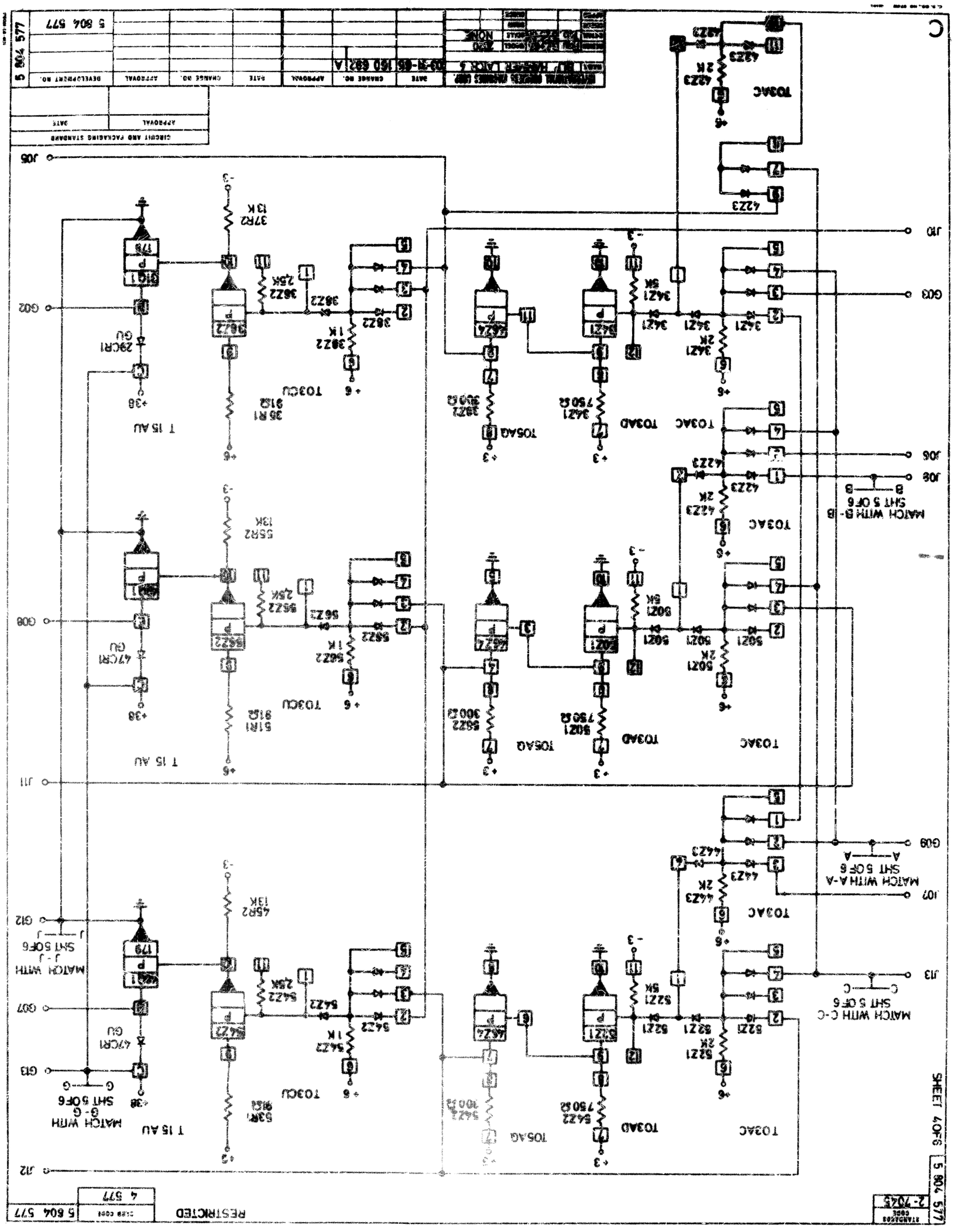
SHEET 4 OF 6
5 804 577
RESTRICTED
MATCH WITH C-C SHT 5 OF 6
MATCH WITH A-A SHT 5 OF 6
MATCH WITH B-B SHT 5 OF 6
MATCH WITH J-J SHT 5 OF 6
MATCH WITH G-G SHT 5 OF 6
T 15 AU
T03AC
T03AD
T05AG
T03CU
J12
J13
J07
J11
J08
J06
J10
J05
G12
G07
G13
G09
G03
G08
G02
+38
+6
+3
-3