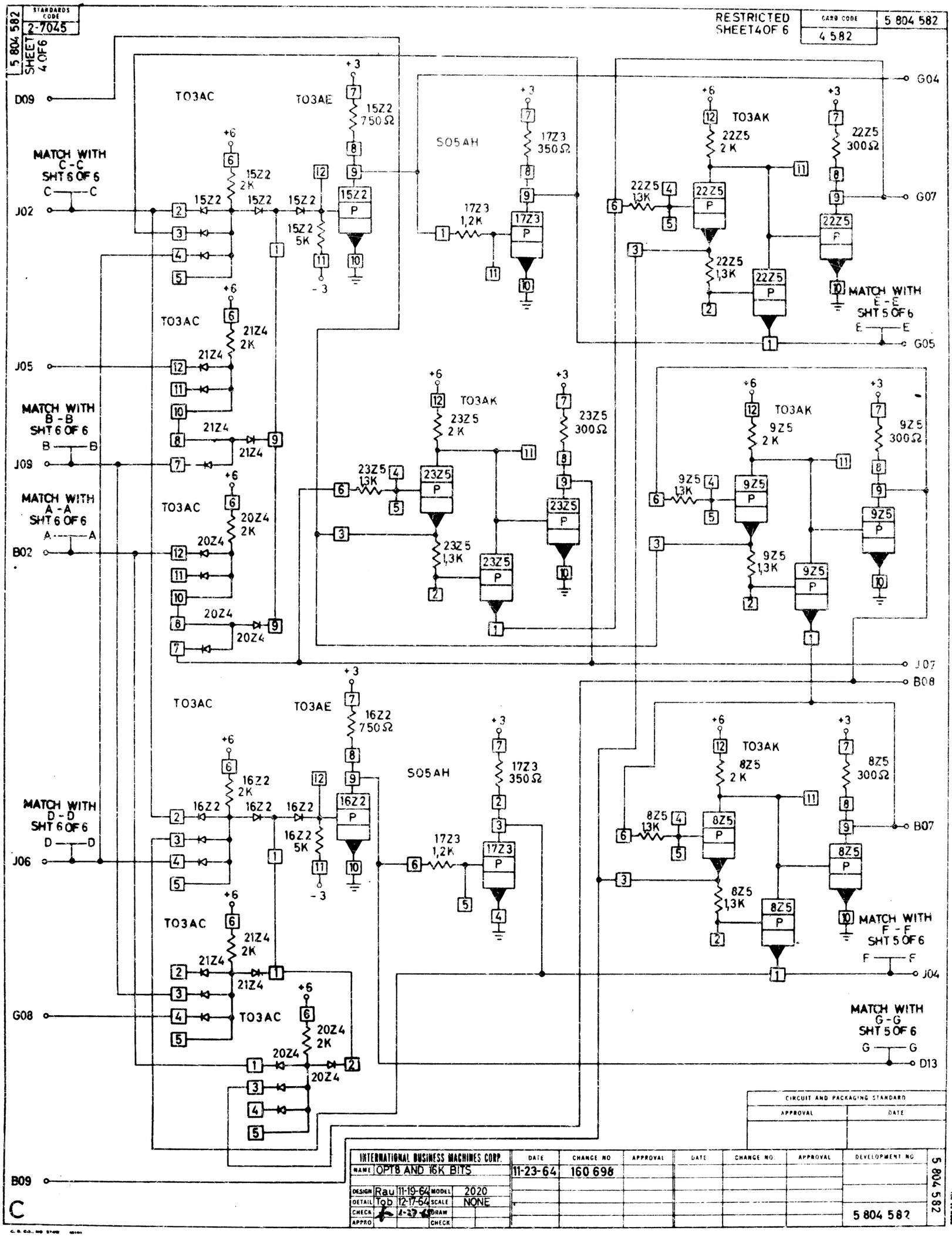
STANDARDS CODE 2-7045
5 804 582 SHEET 4 OF 6
RESTRICTED SHEET 4 OF 6
CARD CODE 4 582
5 804 582
D09
TO3AC
TO3AE
15Z2 750Ω
S05AH
17Z3 350Ω
TO3AK
22Z5 2K
22Z5 300Ω
G04
G07
MATCH WITH C-C SHT 6 OF 6
J02
15Z2 2K
15Z2 5K
17Z3 1,2K
22Z5 1,3K
MATCH WITH E-E SHT 5 OF 6
G05
J05
21Z4 2K
MATCH WITH B-B SHT 6 OF 6
J09
23Z5 2K
23Z5 300Ω
23Z5 1,3K
9Z5 2K
9Z5 300Ω
9Z5 1,3K
MATCH WITH A-A SHT 6 OF 6
B02
20Z4 2K
J07
B08
16Z2 750Ω
16Z2 2K
16Z2 5K
8Z5 2K
8Z5 300Ω
8Z5 1,3K
B07
MATCH WITH D-D SHT 6 OF 6
J06
MATCH WITH F-F SHT 5 OF 6
J04
G08
MATCH WITH G-G SHT 5 OF 6
D13
B09
C
CIRCUIT AND PACKAGING STANDARD
APPROVAL
DATE
INTERNATIONAL BUSINESS MACHINES CORP.
NAME OPT8 AND 16K BITS
DESIGN Rau 11-19-64
DETAIL Tob 12-17-64
CHECK
APPRO
MODEL 2020
SCALE NONE
DRAW
CHECK
DATE 11-23-64
CHANGE NO 160 698
APPROVAL
DATE
CHANGE NO.
APPROVAL
DEVELOPMENT NO
5 804 582