STANDARDS CODE 2-7045

RESTRICTED
SHEET 3 OF 5

CARD CODE 4590 | 5804 590

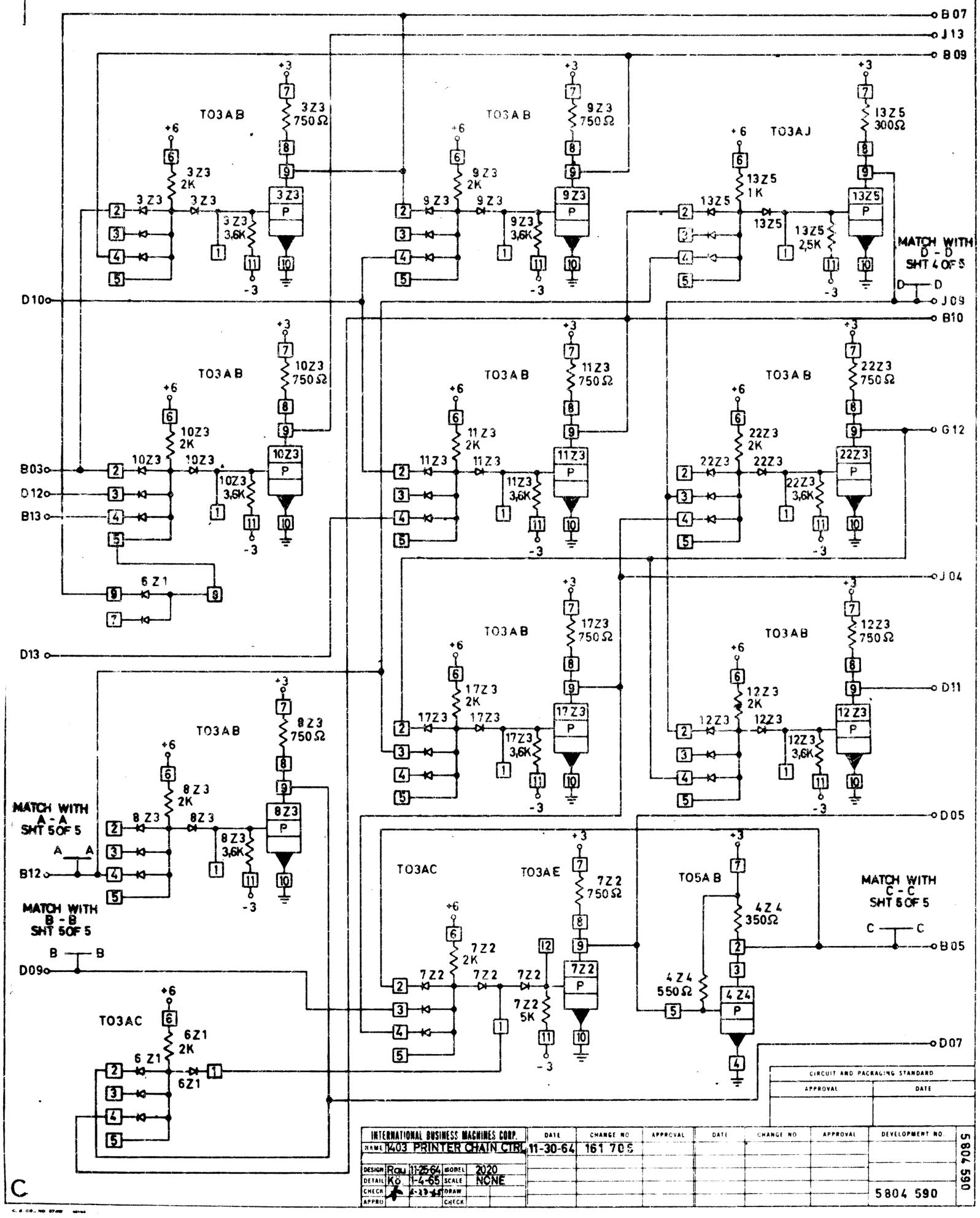

CIRCUIT AND PACKAGING STANDARD	
APPROVAL	DATE

INTERNATIONAL BUSINESS MACHINES CORP.					DATE	CHANGE NO	APPROVAL	DATE	CHANGE NO	APPROVAL	DEVELOPMENT NO.	5804 590
NAME 1403 PRINTER CHAIN CTRL					11-30-64	161 705						
DESIGN	Rau	11-25-64	MODEL	2020								
DETAIL	Kö	1-4-65	SCALE	NONE								
CHECK			DRAW								5804 590	
APPRO			CHECK									