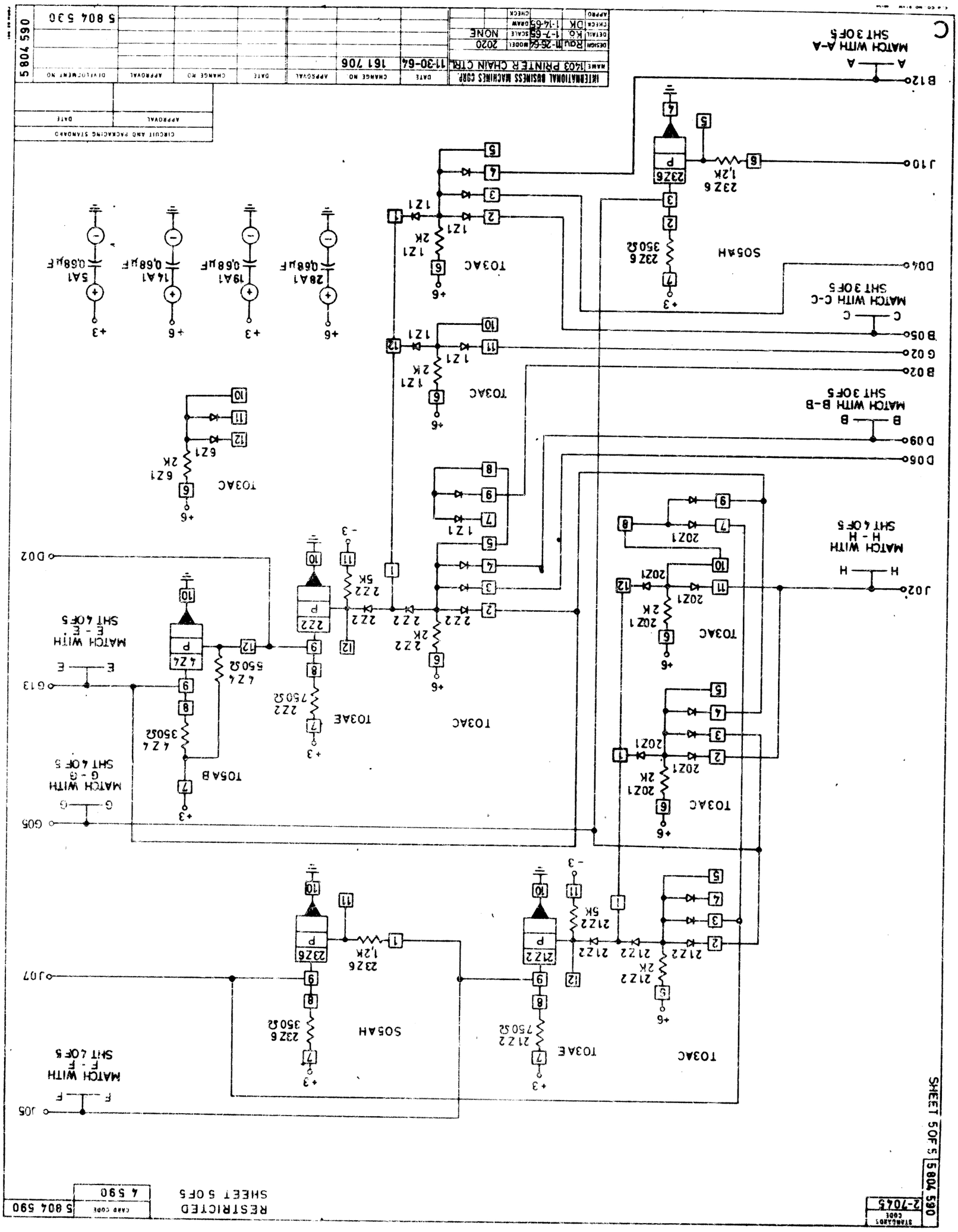
INTERNATIONAL BUSINESS MACHINES CORP.
1403 PRINTER CHAIN CTR.
11-30-64
161 706
5 804 530
5 804 590
CIRCUIT AND PACKAGING STANDARD
DESIGN
DETAIL
CHECK
APPRO
MODEL
SCALE
DRAWN
CHECK
NONE
J10
D04
B05
G02
B02
D09
D06
J02
D02
G05
G13
J07
J05
MATCH WITH A-A SHT 3 OF 5
MATCH WITH C-C SHT 3 OF 5
MATCH WITH B-B SHT 3 OF 5
MATCH WITH H - H SHT 4 OF 5
MATCH WITH G - G SHT 4 OF 5
MATCH WITH E - E SHT 4 OF 5
MATCH WITH F - F SHT 4 OF 5
TO3AC
TO3AE
TO5AB
SO5AH
SHEET 5 OF 5
RESTRICTED
SHEET 5 OF 5
4 590
5 804 590
2-7045