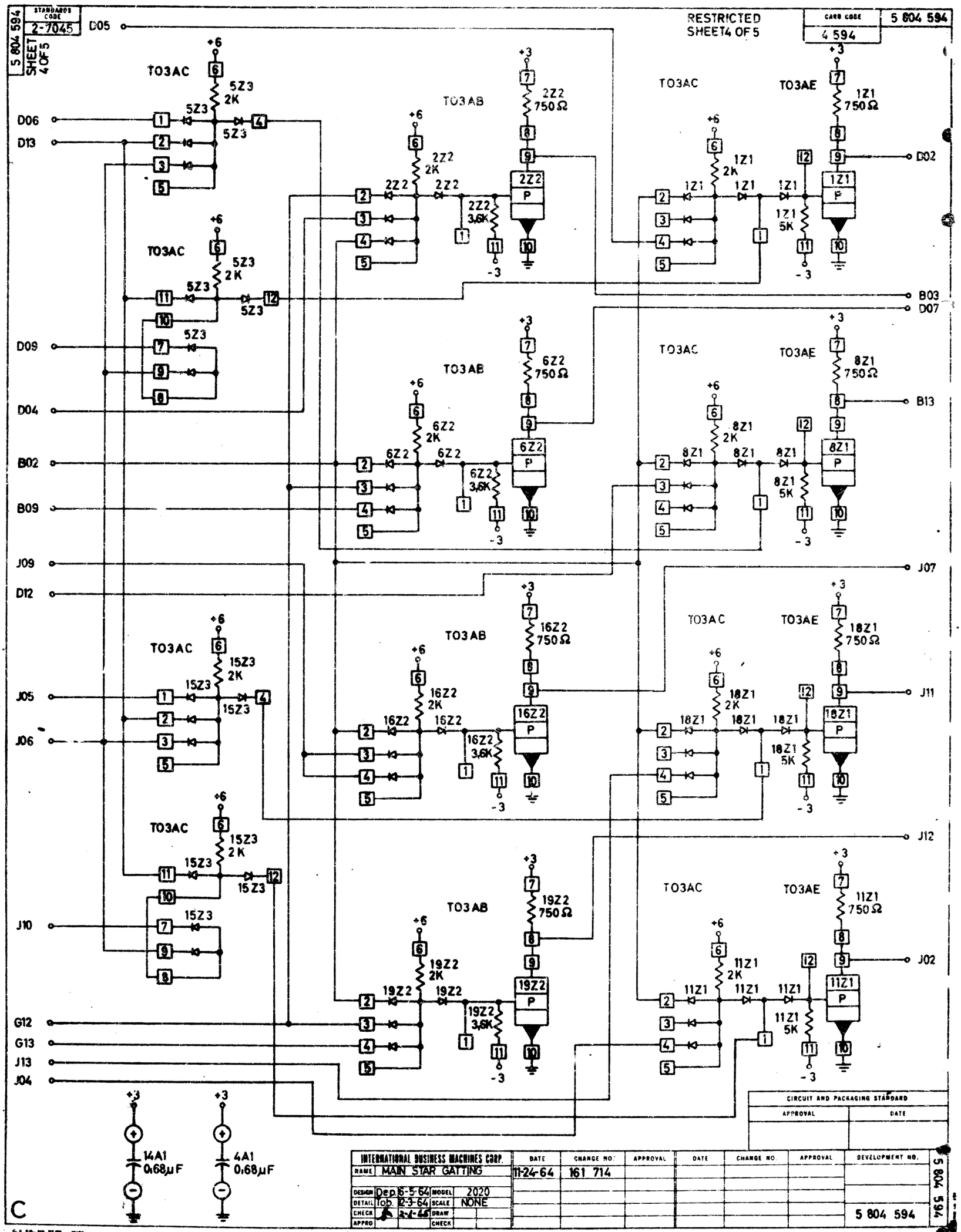
5 804 594
SHEET 4 OF 5
STANDARDS CODE
2-7045
RESTRICTED
SHEET 4 OF 5
CARD CODE
4 594
5 804 594
D05
D06
D13
D09
D04
B02
B09
J09
D12
J05
J06
J10
G12
G13
J13
J04
D02
B03
D07
B13
J07
J11
J12
J02
TO3AC
TO3AB
TO3AE
5Z3
2K
2Z2
750Ω
2Z2
3,6K
1Z1
5K
6Z2
8Z1
16Z2
18Z1
19Z2
11Z1
15Z3
+6
+3
-3
14A1
0,68μF
4A1
0,68μF
CIRCUIT AND PACKAGING STANDARD
APPROVAL
DATE
INTERNATIONAL BUSINESS MACHINES CORP.
NAME MAIN STAR GATTING
DESIGN Dep. 6-5-64
DETAIL Job. 12-3-64
CHECK 2-1-65
APPRO
MODEL 2020
SCALE NONE
DRAW
CHECK
DATE
CHANGE NO.
APPROVAL
11-24-64
161 714
DEVELOPMENT NO.
5 804 594
C