STANDARDS CODE 2-7045

5 804 594 SHEET 5 OF 5

RESTRICTED
SHEET 5 OF 5

CARD CODE 4 594 | 5 804 594

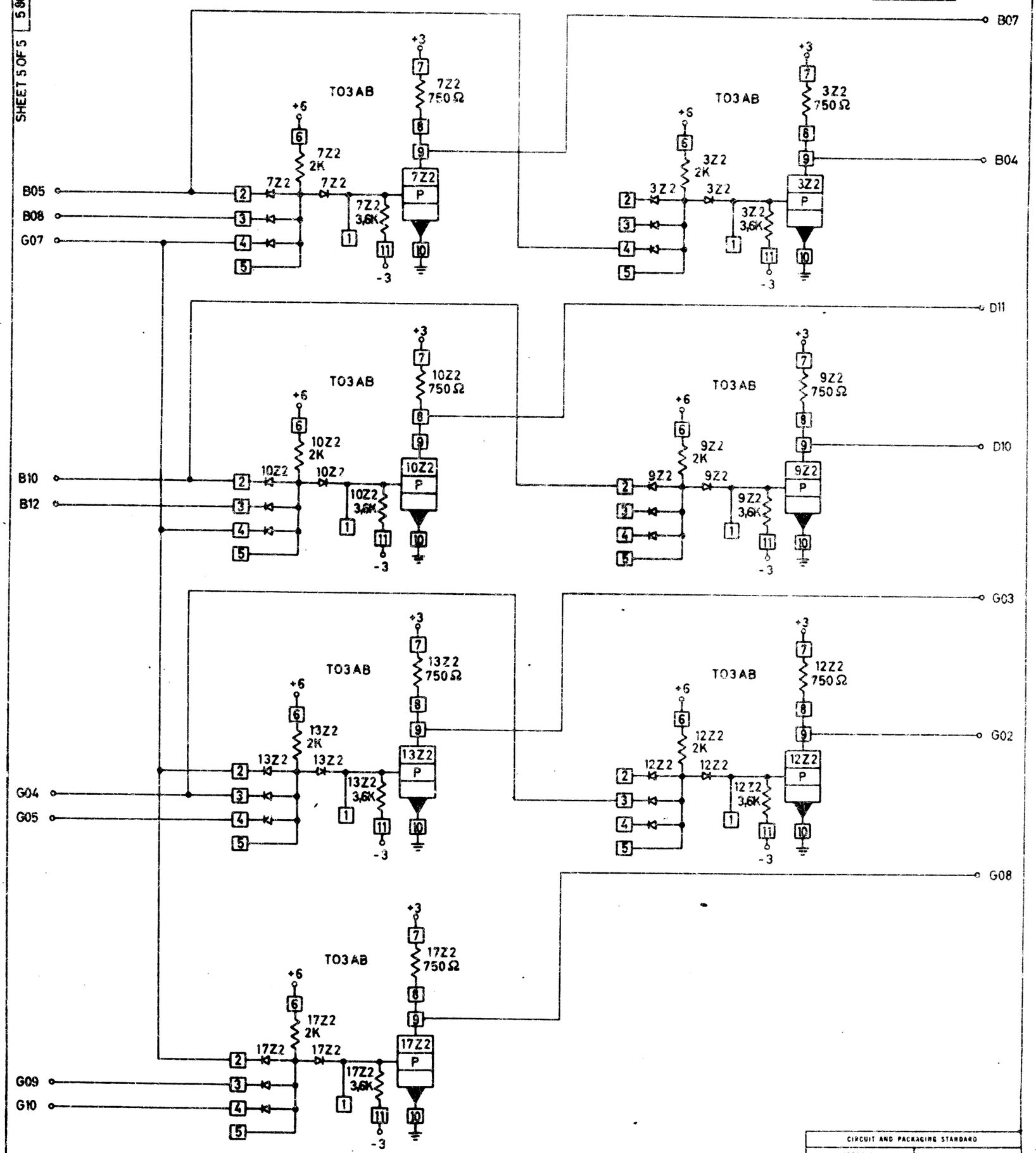

CIRCUIT AND PACKAGING STANDARD	
APPROVAL	DATE

INTERNATIONAL BUSINESS MACHINES CORP.					DATE	CHANGE NO.	APPROVAL	DATE	CHANGE NO.	APPROVAL	DEVELOPMENT NO.
NAME	MAIN STAR GATTING				11-24-64	161 714					
DESIGN	Dep	6-5-64	MODEL	2020							
DETAIL	Tob	12-3-64	SCALE	NONE							
CHECK		2-1-65	DRAW								5 804 594
APPRO			CHECK								

C

5 804 594