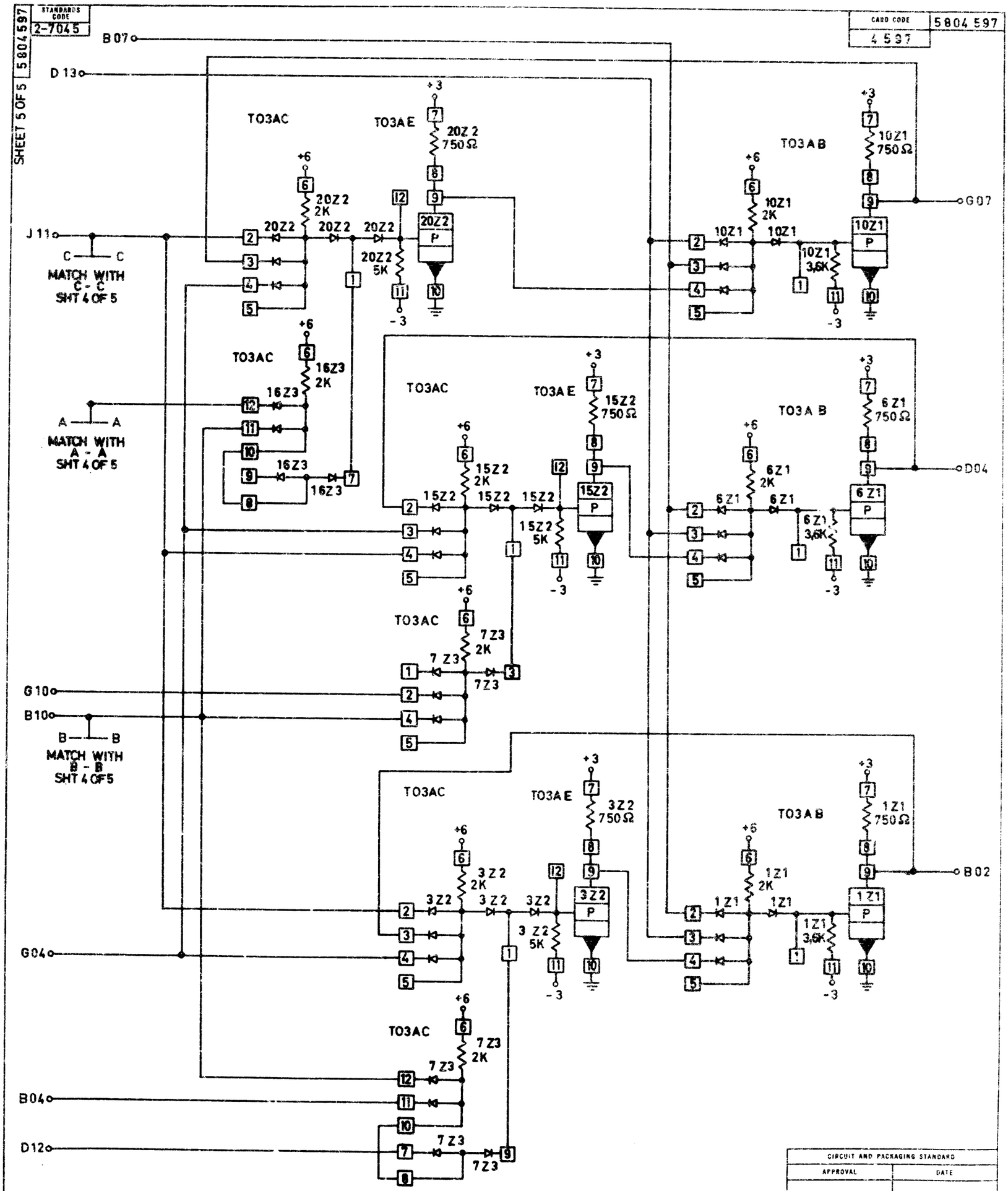

CIRCUIT AND PACKAGING STANDARD	
APPROVAL	DATE

INTERNATIONAL BUSINESS MACHINES CORP.													
NAME	ROS PARITY AND SENSE CORRECTION					DATE	CHANGE NO.	APPROVAL	DATE	CHANGE NO	APPROVAL	DEVELOPMENT NO.	5804597
DESIGN	Rau	12-11-64	MODEL	2020		11-24-64	161 717						
DETAIL	Ko.	1-14-65	SCALE	NONE		8 OCT 65	165038 B						
CHECK			DRAW										
APPRO		3-4-65	CHECK									5804597	

C

C. B. CO., NO. 8740W