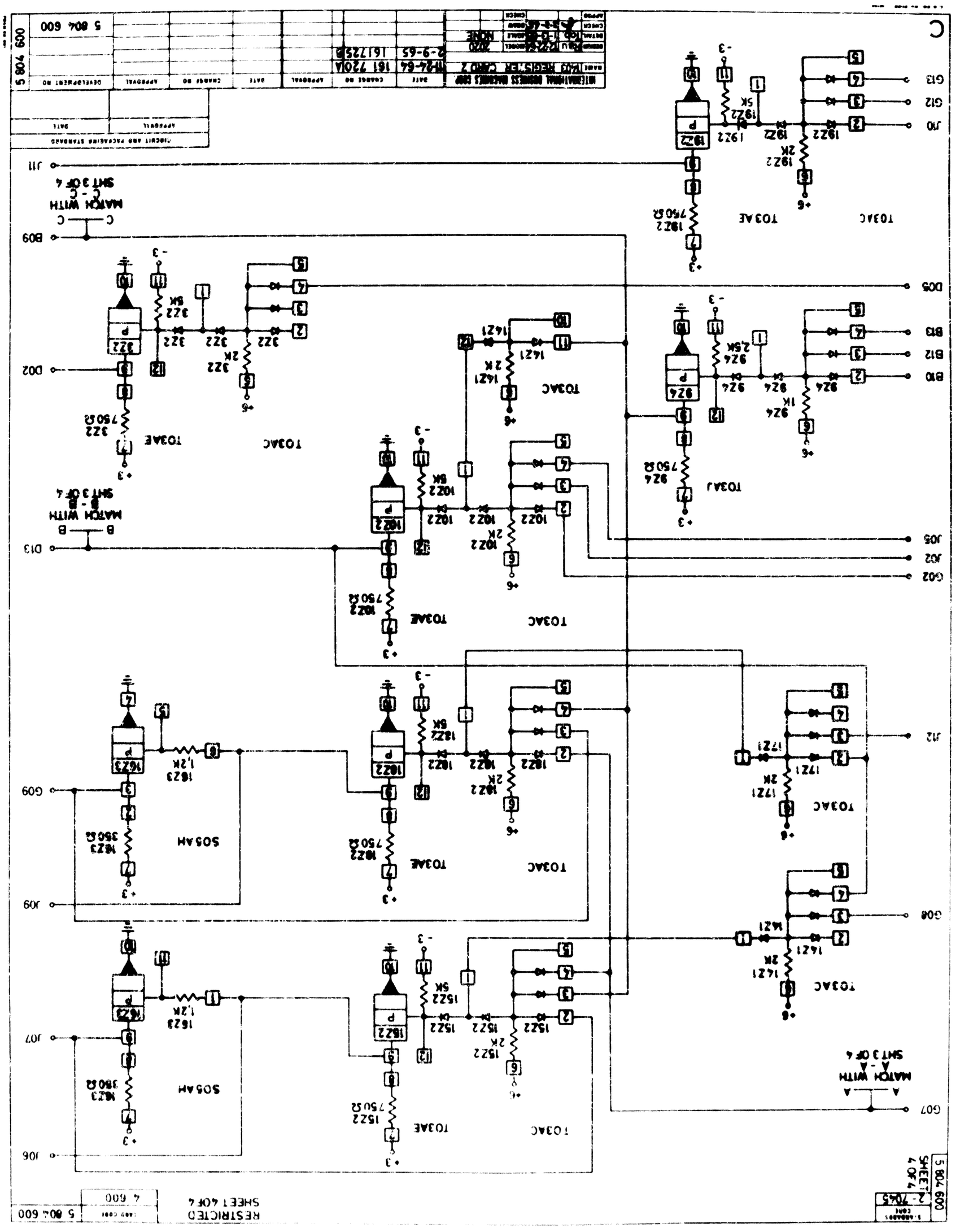
MINIMUM DOUBLE MACHINES CORP
K-03 REGISTER CARD 2
11-24-64
2-9-65
161 720A
161725B
NONE
5 804 600
CIRCUIT AND PACKAGING STANDARD
DEVELOPMENT NO
APPROVAL
CHANGE NO
DATE
RESTRICTED
SHEET 4 OF 4
MATCH WITH
SHT 3 OF 4
TO3AC
TO3AE
TO3AJ
SO5AM
J11
B09
D05
D02
B10
B12
B13
D13
G02
J02
J05
J12
G13
G12
J10
G08
G07
J07
J06
J08
J09
G09