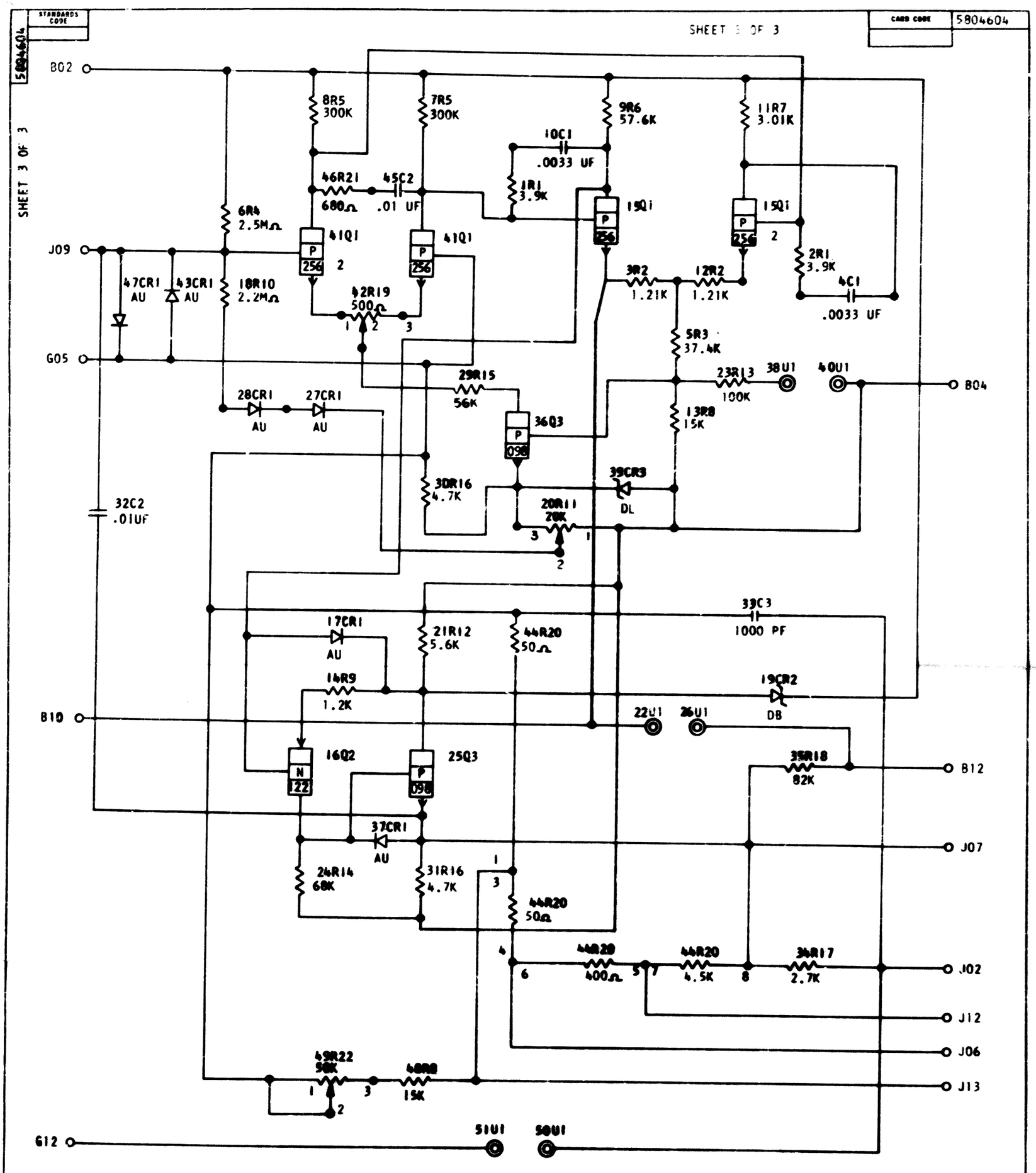
STANDARDS CODE
5804604
SHEET 3 OF 3
CARD CODE
5804604
B02
8R5 300K
7R5 300K
9R6 57.6K
11R7 3.01K
10C1 .0033 UF
46R21 680Ω
45C2 .01 UF
1R1 3.9K
15Q1
6R4 2.5MΩ
41Q1
J09
47CR1 AU
43CR1 AU
18R10 2.2MΩ
42R19 500Ω
3R2 1.21K
12R2 1.21K
2R1 3.9K
4C1 .0033 UF
G05
5R3 37.4K
29R15 56K
23R13 100K
38U1
40U1
B04
28CR1 AU
27CR1 AU
36Q3
13R8 15K
39CR3 DL
32C2 .01UF
30R16 4.7K
20R11 20K
33C3 1000 PF
17CR1 AU
21R12 5.6K
44R20 50Ω
14R9 1.2K
19CR2 DB
B10
22U1
26U1
16Q2
25Q3
35R18 82K
B12
37CR1 AU
J07
24R14 68K
31R16 4.7K
44R20 50Ω
44R20 400Ω
44R20 4.5K
34R17 2.7K
J02
J12
J06
49R22 50K
40R8 15K
J13
G12
51U1
50U1
CIRCUIT AND PACKAGING STANDARD
APPROVAL
DATE
INTERNATIONAL BUSINESS MACHINES CORP.
PREAMPLIFIER
DEVELOPMENT NO.
SS197
5804604
C