RESTRICTED
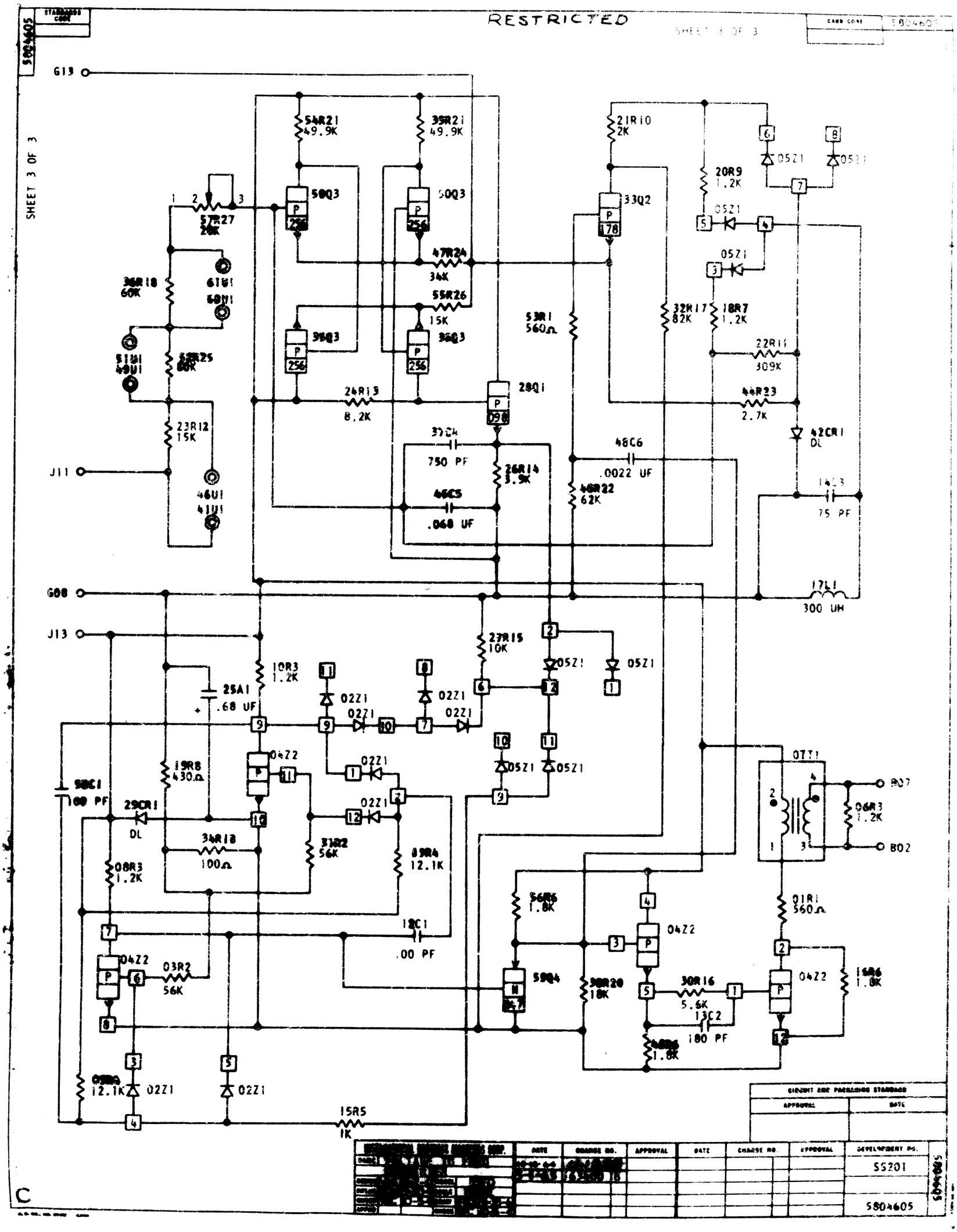
SHEET 3 OF 3