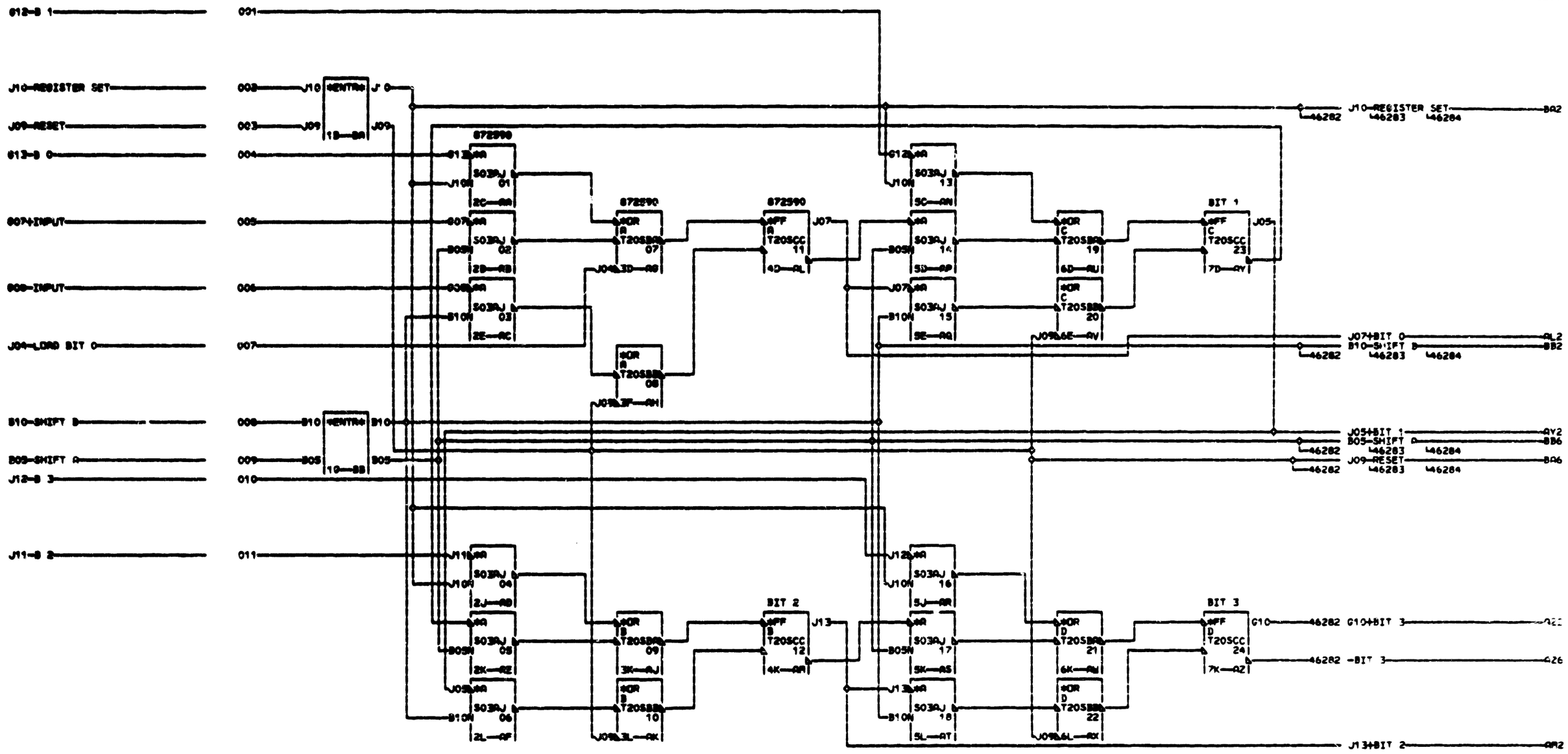

CARD SIZE0 2-24 PAC T65
VOLTAGE PINS
4
6 +3V00030\J03 GND00080\J08
2 SPECIAL RESTRICTED
8 *DECOUPLE ALL VOLTAGES TO GND
1 *WITH .68MFD CAP P/N2414883
000

02-24-65 163068 A
09-10-65 165522 B
02-23-68 173122 C

FILE SHIFT REGISTER 16 BITS			4
DATE 07-30-68 MACH. ASSEMBLY			6
LOC 200A FRAME			2
	P.No 5804628		9
			1
IBM CORP. SD BLK.		BC	000