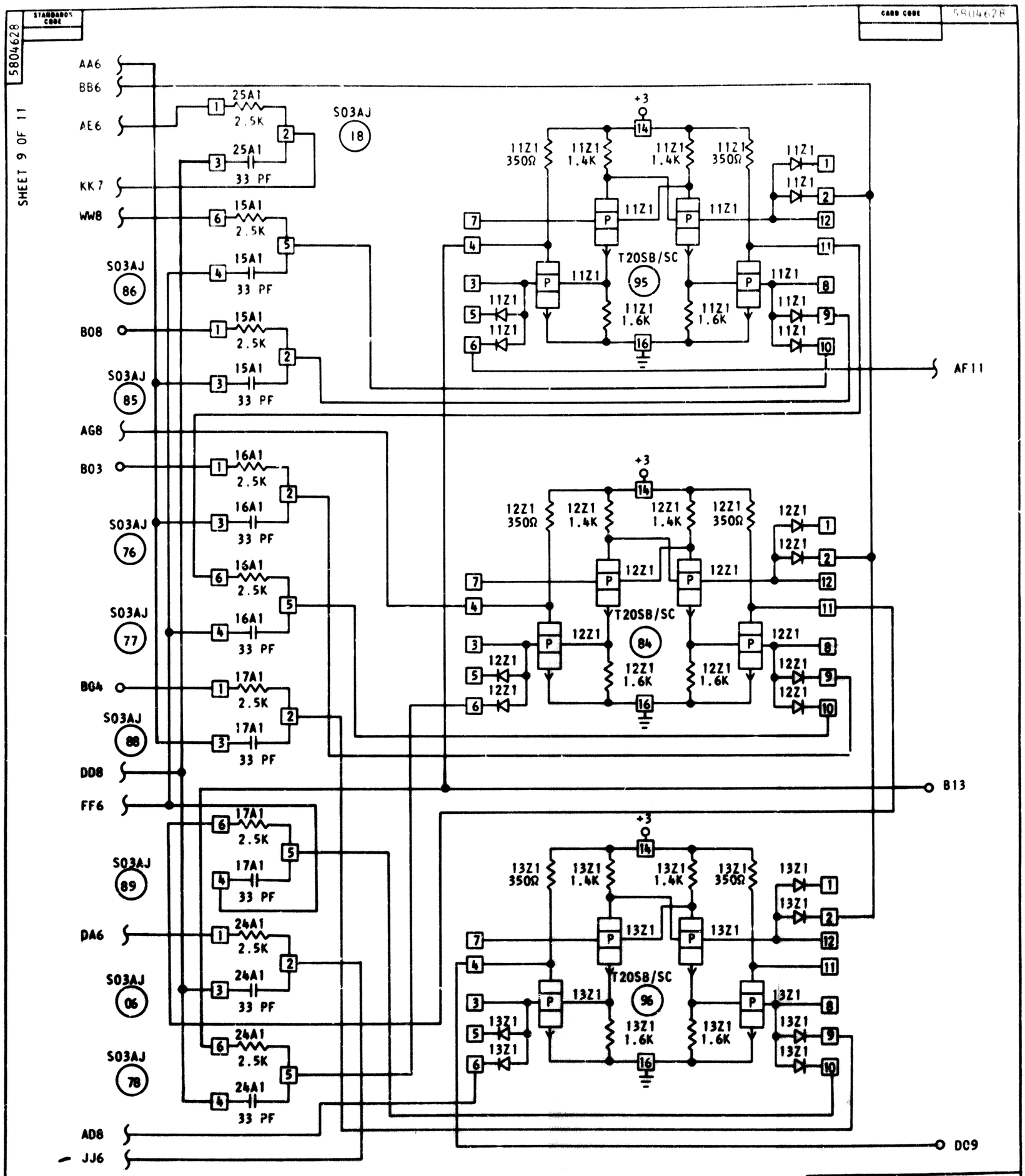
STANDARD'S CODE
5804628
CARD CODE
5804628
SHEET 9 OF 11
AA6
BB6
AE6
KK7
WW8
B08
AG8
B03
B04
DD8
FF6
DA6
AD8
JJ6
AF11
B13
DC9
S03AJ
18
86
85
76
77
88
89
06
78
25A1
2.5K
33 PF
15A1
16A1
17A1
24A1
+3
11Z1
350Ω
1.4K
1.6K
T20SB/SC
95
12Z1
84
13Z1
96
P
CIRCUIT AND PACKAGING STANDARD
APPROVAL
DATE
REGISTER 16 BITS
DATE
CHANGE NO.
APPROVAL
DEVELOPMENT NO.
9-25-65
163068
A
SS394
30CT65
165522
B
23FEB66
173122
C
5804628
C