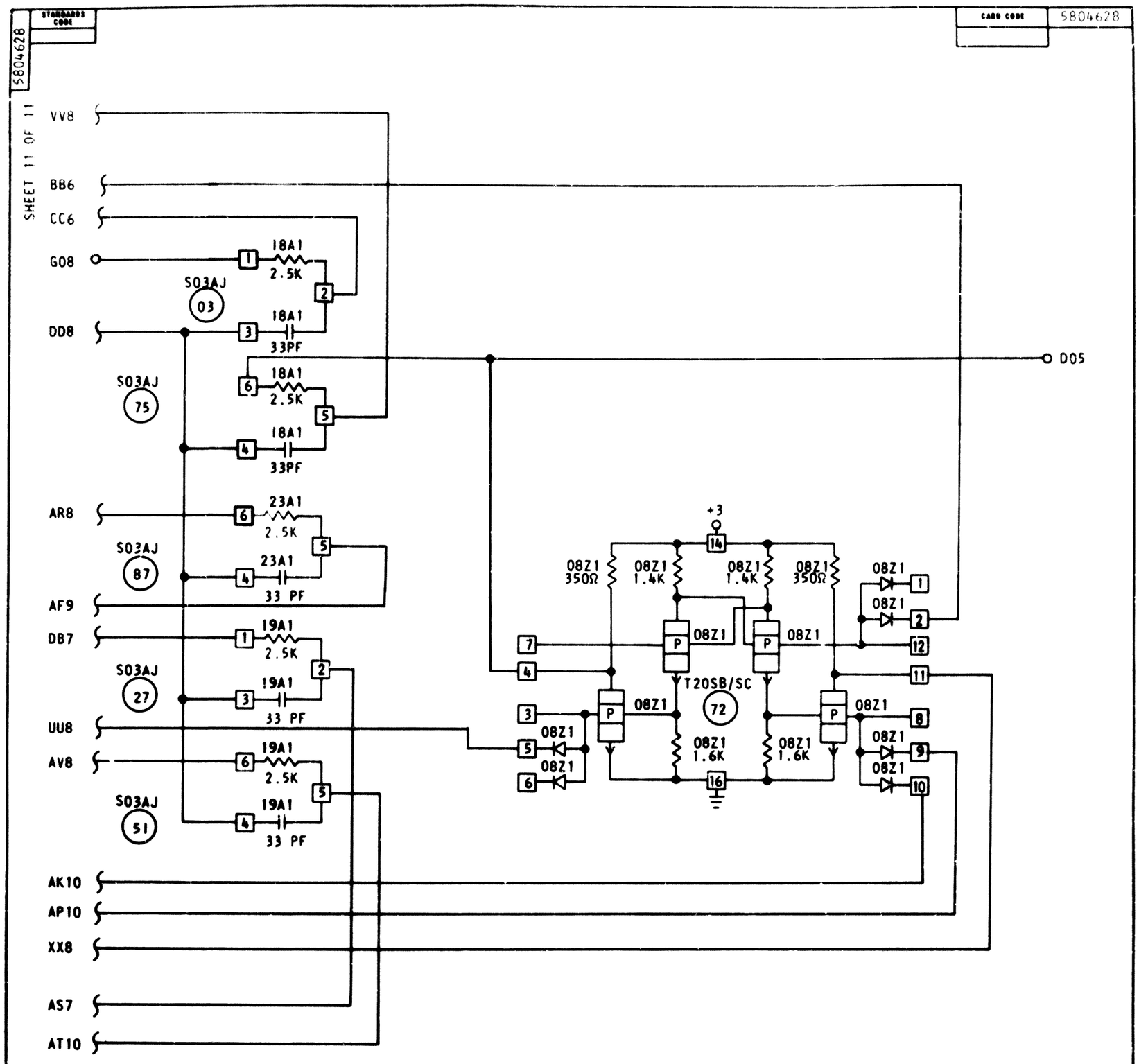

CIRCUIT AND PACKAGING STANDARD	
APPROVAL	DATE

	DATE	CHANGE NO.		APPROVAL	DATE	CHANGE NO.		APPROVAL	DEVELOPMENT NO.
	3-25-65	163068	A						SS394
	13OCT65	165522	B						
	23FEB68	173122	C						
									5804628

5804628

C