STANDARDS CODE	CIRCUIT AND PACKAGING STANDARD		SYM	DATE	CHANGE NO.	TECH APPRO	SYM	DATE	CHANGE NO.	TECH APPRO	DEVELOPMENT NO.	S/M
2-7046				4-12-65	162453							
CARD CODE	APPROVAL	DATE										
4634	GHM	2-24-65									5804634	

RESTRICTED

SHEET 7 OF 11

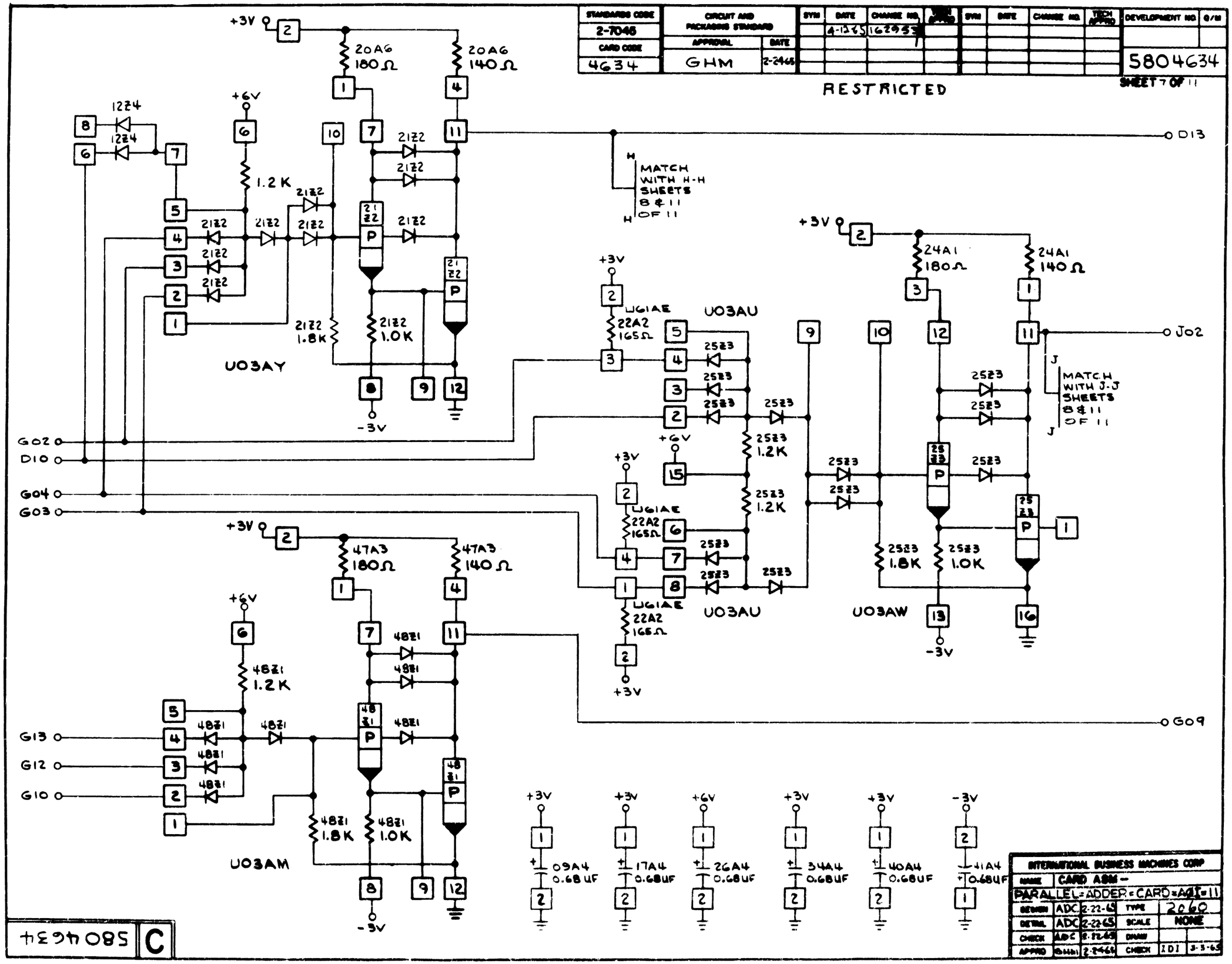

INTERNATIONAL BUSINESS MACHINES CORP				
NAME	CARD ASM – PARALLEL-ADDER-CARD-A&I-11			
DESIGN	ADC	2-22-65	TYPE	2060
DETAIL	ADC	2-22-65	SCALE	NONE
CHECK	ADC	2-22-65	DRAW	
APPRO	GHM	2-24-65	CHECK	IDI 3-3-65

C 5804634