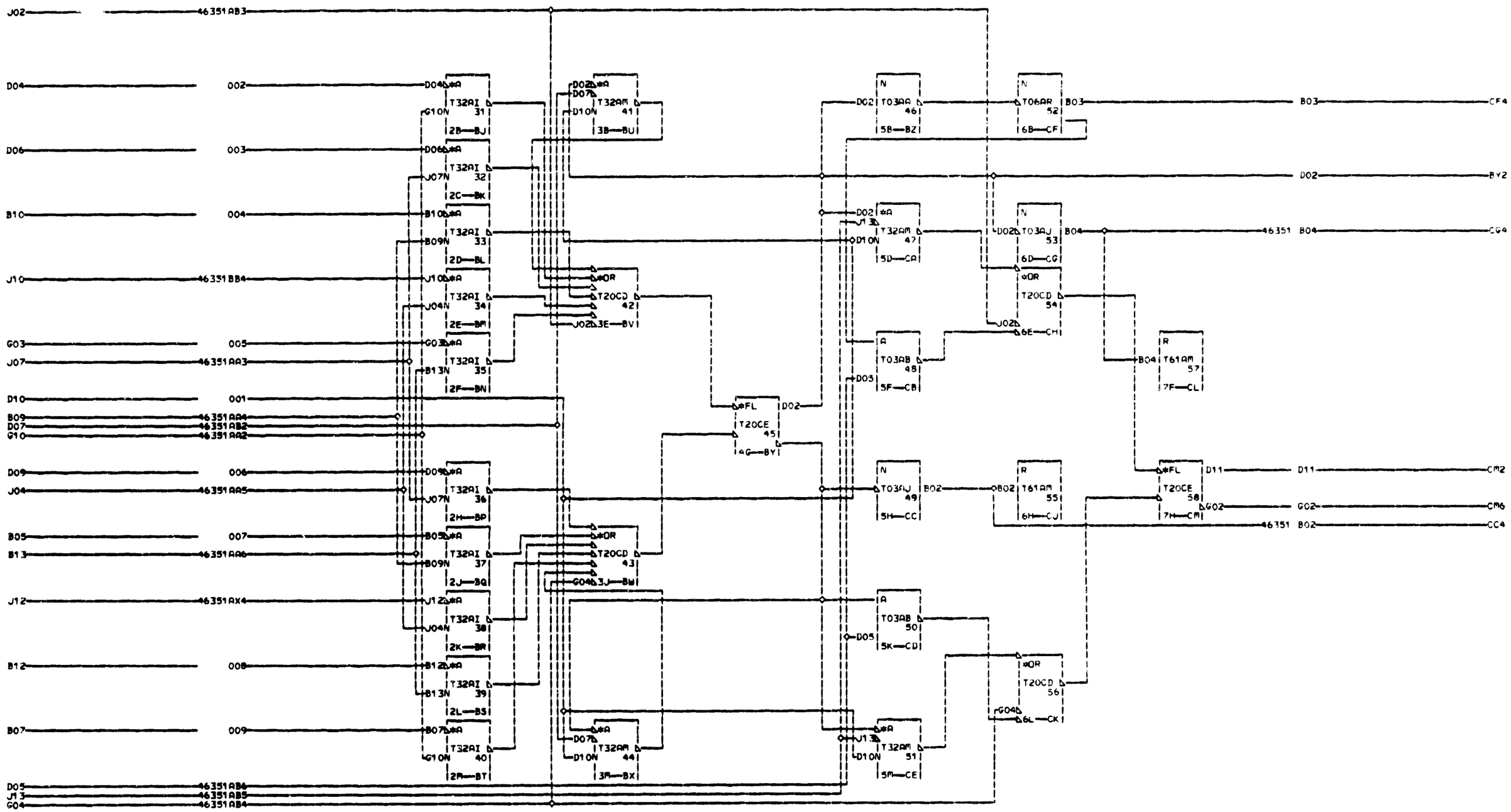

04-03-66 166178 C
06-23-66 168335 D
08-16-66 168466 E

B REG AND C REG CARD
DATE 08-17-66 MRCH. ASSEMBLY
LOG 420 FRAME
MANLEY P.N. 5804635
IBM CORP. UK BLK. CN

4
6
3
5
2
000