~~RESTRICTED~~

STANDARDS CODE	CIRCUIT AND PACKAGING STANDARD		SYM	DATE	CHANGE NO	TECH APPRO	SYM	DATE	CHANGE NO	TECH APPRO	DEVELOPMENT N
2-7045				2-28-65	DEV4772			1-4-66	167332		
CARD CODE	APPROVAL	DATE		5-18-65	163813 A			16 Aug 66	168466 E		5804635
4635	GHM	2-8-65		26AUG66	164953 B						
				8DEC65	166178 C						

SHEET 5 OF 9

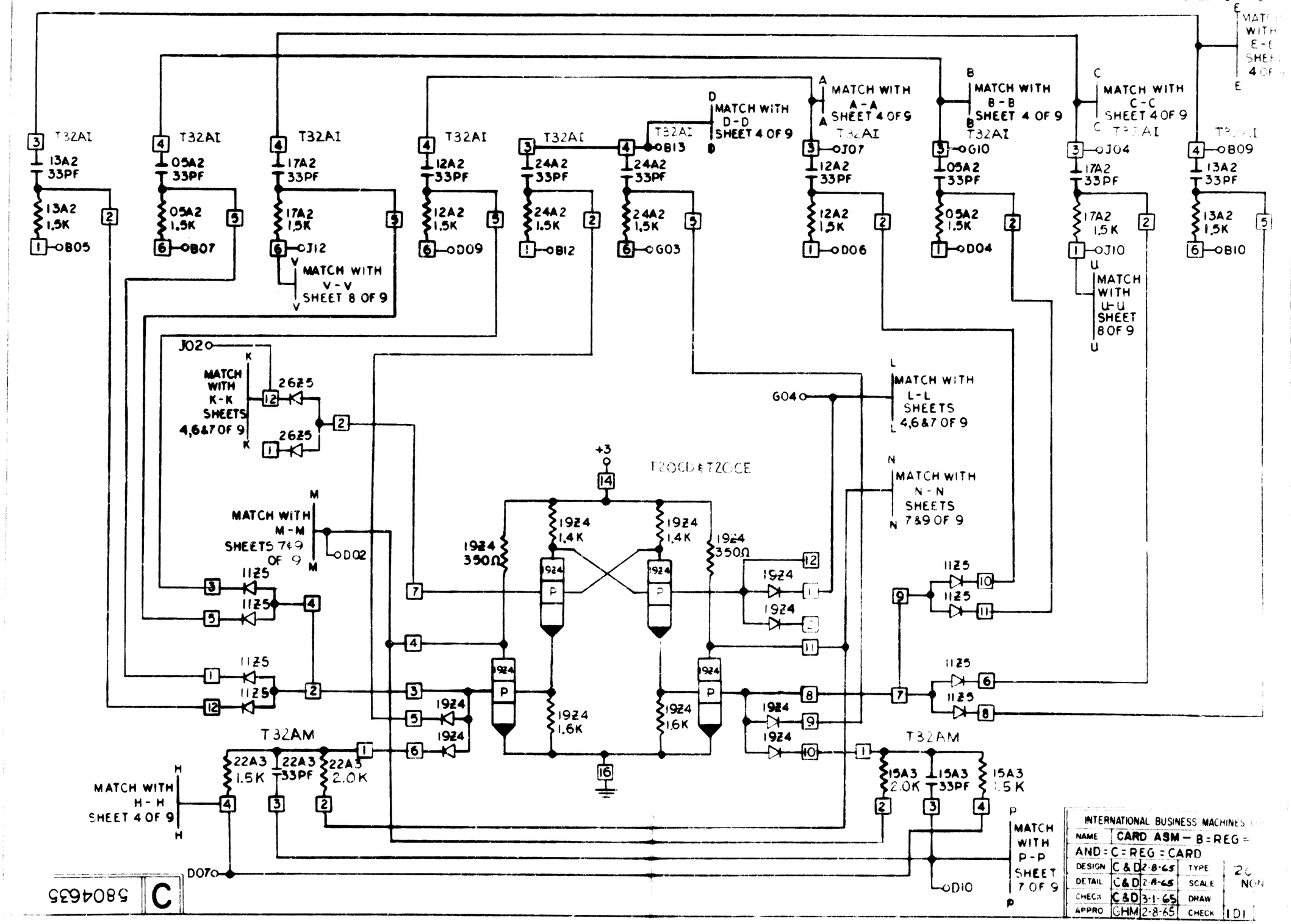

INTERNATIONAL BUSINESS MACHINES				
NAME	CARD ASM – B = REG = AND = C = REG = CARD			
DESIGN	C & D	2-8-65	TYPE	2C NON
DETAIL	C & D	2-8-65	SCALE	
CHECK	C & D	3-1-65	DRAW	
APPRO	GHM	2-8-65	CHECK	1D1

C 5804635