RESTRICTED

STANDARDS CODE	CIRCUIT AND PACKAGING STANDARD		SYM	DATE	CHANGE NO	TECH APPRO	SYM	DATE	CHANGE NO	TECH APPRO	DEVELOPMENT
2-7045				3-8-65	DEV4772			4-66	167335		
CARD CODE	APPROVAL	DATE		5-15-65	163813A			16 May 66	168466 E		
4635	GHM	2-8-65		26AUG65	164953B						
				8DEC65	166178 C						

5804635
SHEET 6 OF 9

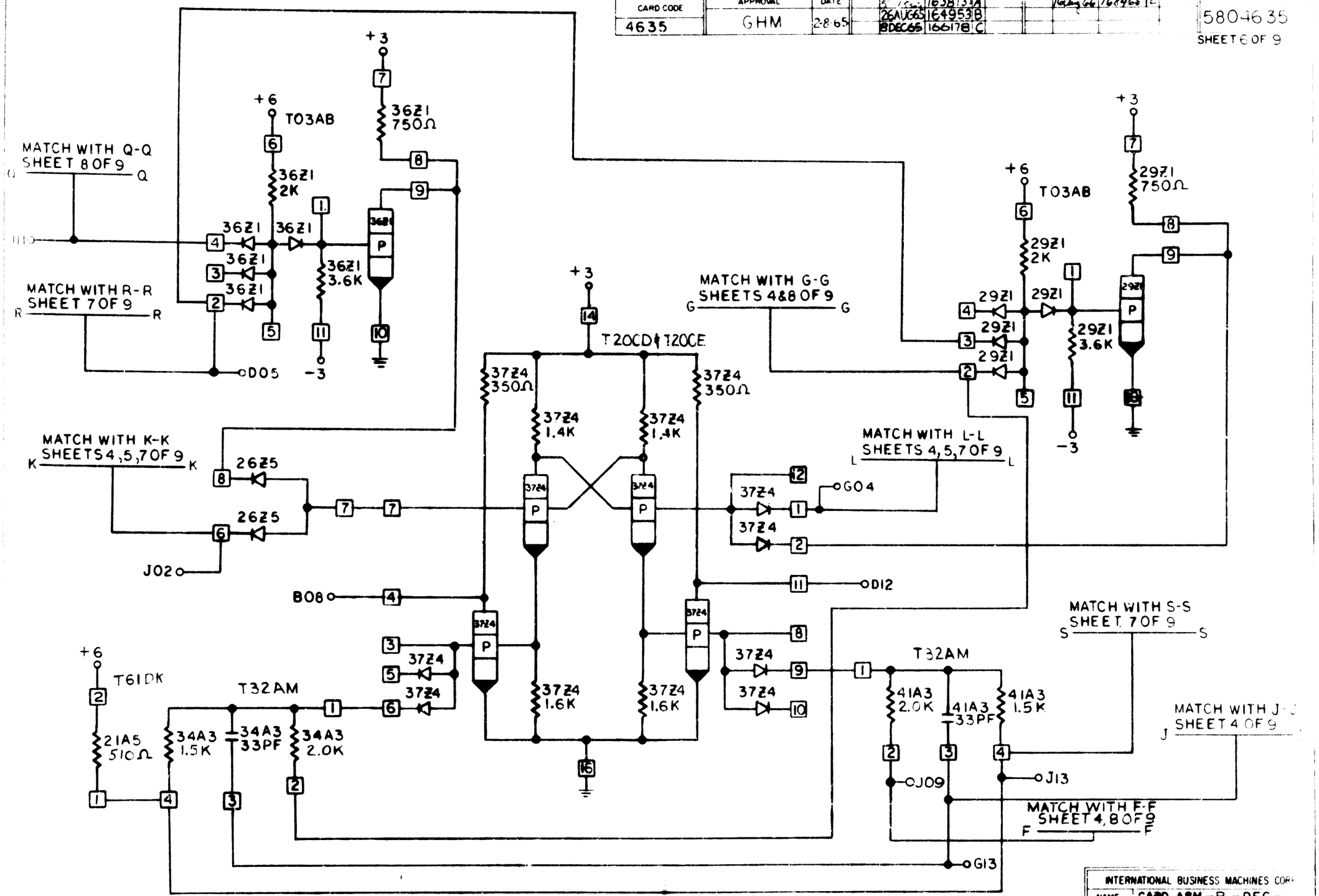

INTERNATIONAL BUSINESS MACHINES CORP				
NAME	CARD ASM-B-REG-AND-C-REG-CARD			
DESIGN	C&D 2-8-65	TYPE	20+4	
DETAIL	C&D 2-8-65	SCALE	NONE	
CHECK	C&D 3-1-65	DRAW		
APPRO	GHM 2-8-65	CHECK	IDI 3-10-65	

C 5804635