FORM 2-7045-6 (9-63)

STANDARDS CODE	CIRCUIT AND PACKAGING STANDARD		SYM	DATE	CHANGE NO	TECH APPRO	SYM	DATE	CHANGE NO	TECH APPRO	DEVELOPMENT NO	Q/M
2-7045				4-23-65	163807	A						
CARD CODE	APPROVAL	DATE										
4639	GHM	3-1-65									5804637	

RESTRICTED

SHEET 6 OF 6

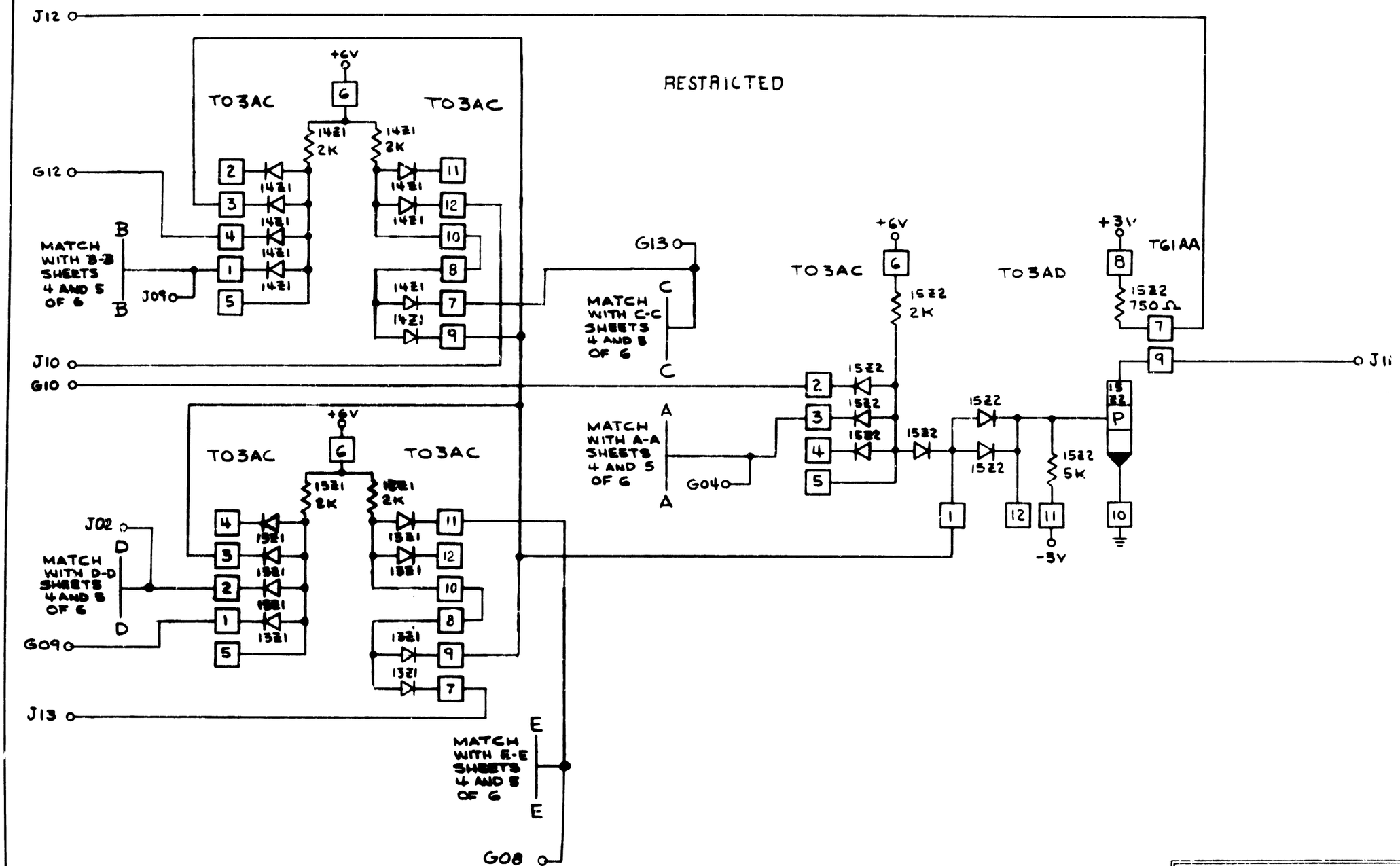

RESTRICTED

INTERNATIONAL BUSINESS MACHINES CORP				
NAME	CARD ASM - 5 = WAY = FUNNEL-CARD			
DESIGN	ADC	2-17-65	TYPE	2044
DETAIL	ADC	2-17-65	SCALE	NONE
CHECK	ADC	2-19-65	DRAW	
APPRO	GHM	4-8-65	CHECK	1D1 22463

5804637 C