FORM 7045-6 (8-63)

RESTRICTED

STANDARDS CODE	CIRCUIT AND PACKAGING STANDARD		SYM	DATE	CHANGE NO	TECH APPRO	SYM	DATE	CHANGE NO	TECH APPRO	DEVELOPMENT NO	Q M
2-7045				6-27-65	163817 A							
CARD CODE	APPROVAL	DATE		11 AUG 65	164954 B							
4638	GHM	3-5-65		28 MAR 66	167694 C						5804638	

SHEET 6 OF 11

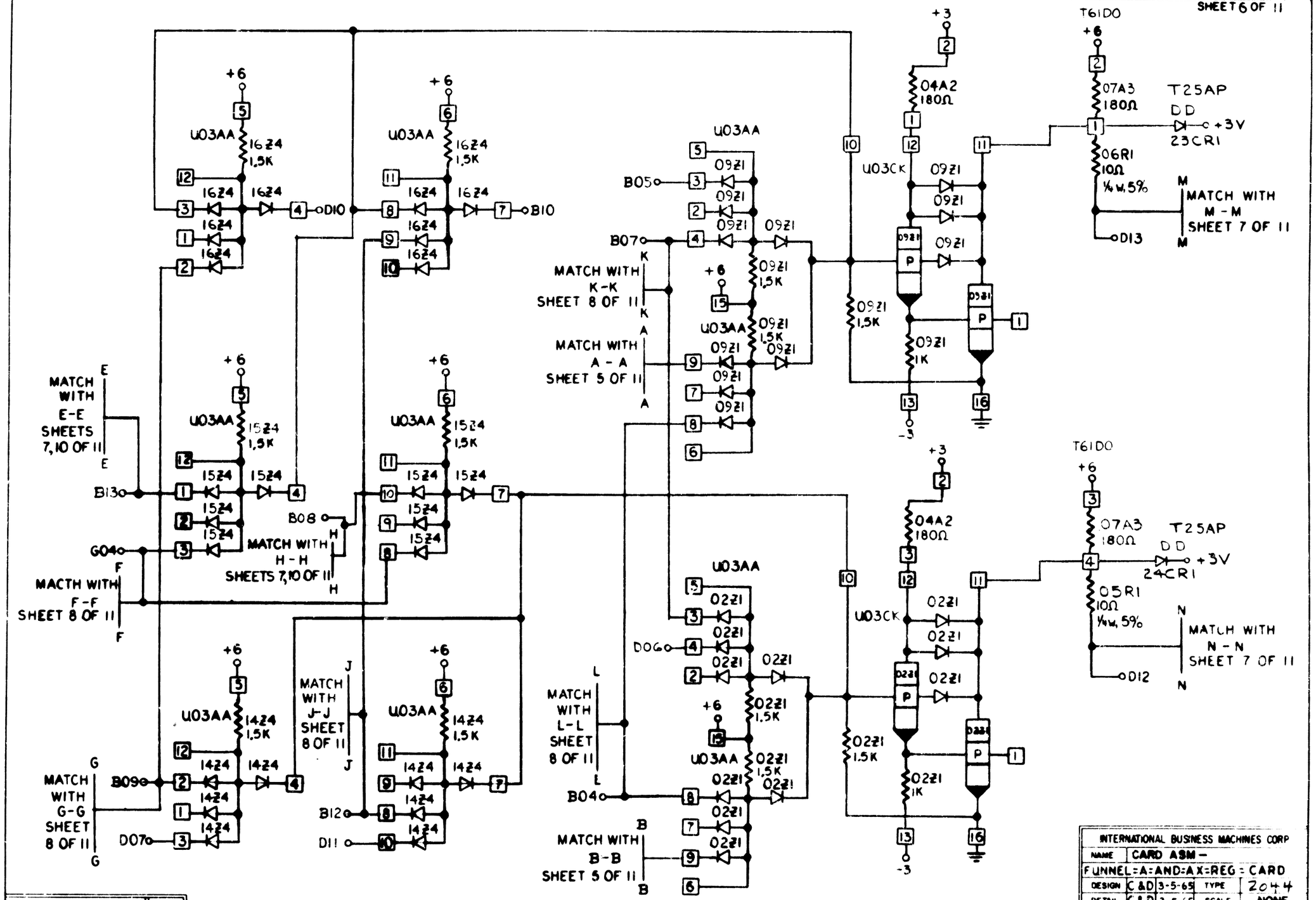

INTERNATIONAL BUSINESS MACHINES CORP				
NAME	CARD ASM –			
FUNNEL=A=AND=AX=REG = CARD				
DESIGN	C & D	3-5-65	TYPE	2044
DETAIL	C & D	3-5-65	SCALE	NONE
CHECK	C & D	4-1-65	DRAW	
APPRO	GHM	3-5-65	CHECK	

C 5804638