FORM 2-7046-6 (9-63)

RESTRICTED

STANDARDS CODE	CIRCUIT AND PACKAGING STANDARD		SYM	DATE	CHANGE NO	TECH APPRO	SYM	DATE	CHANGE NO	TECH APPRO	DEVELOPMENT NO	Q/M
2-7046				2-19-65	163810	A						
CARD CODE	APPROVAL	DATE			167682	B						
4639	GHM	2-19-65									5804639	

SHEET 1 OF 17

RESTRICTED

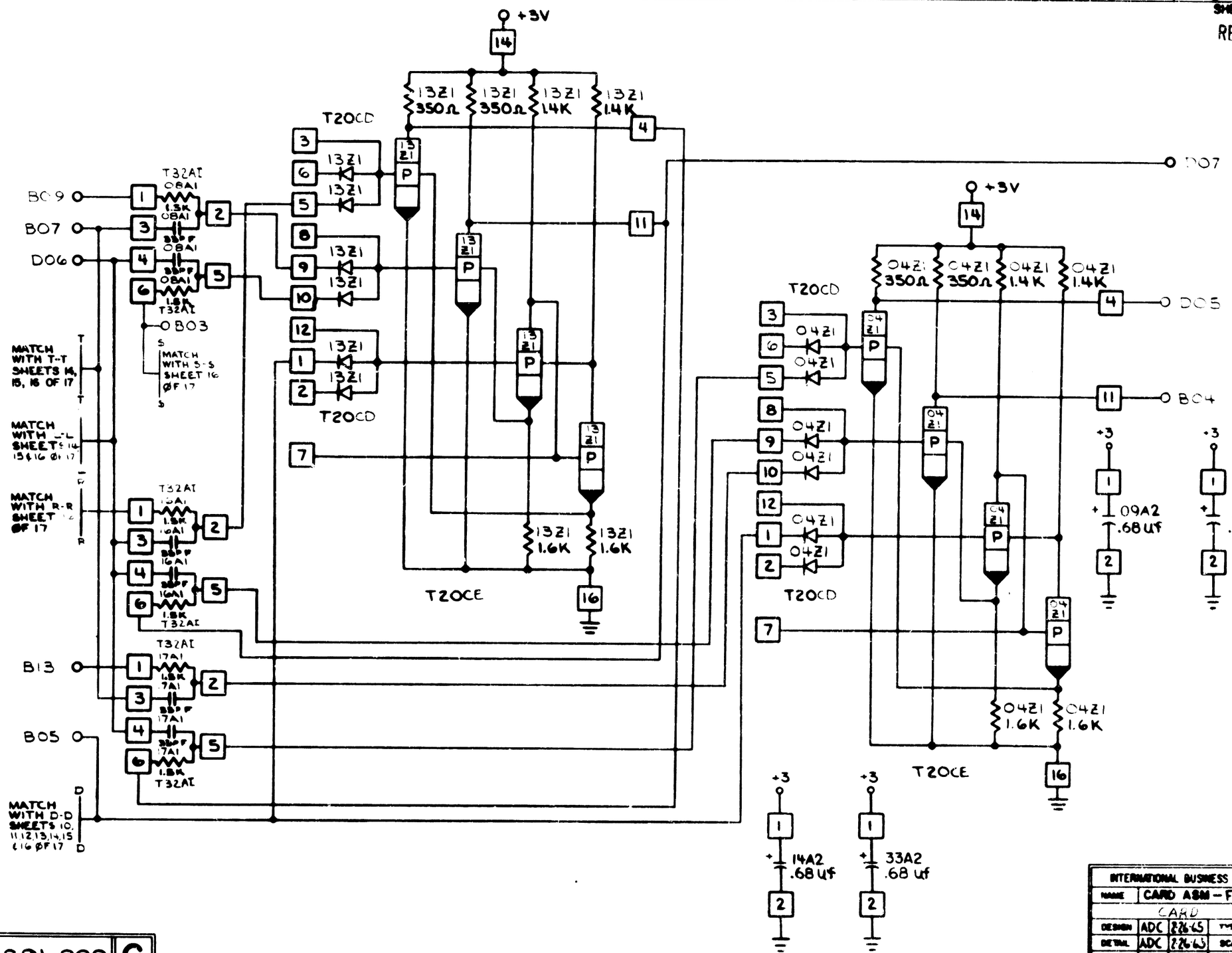

INTERNATIONAL BUSINESS MACHINES CORP					
NAME	CARD ASM – FP•MTG•REG				
	CARD				
DESIGN	ADC	2-26-65	TYPE	2044	
DETAIL	ADC	2-26-65	SCALE	NONE	
CHECK	ADC	2-26-65	DRAW		
APPRO	GHM	2-19-65	CHECK	EDI	3-12-65

C 5804639