FORM Z-7046-6 (6-63)

RESTRICTED

STANDARDS CODE	CIRCUIT AND PACKAGING STANDARD		SYM	DATE	CHANGE NO	TECH APPRO	SYM	DATE	CHANGE NO	TECH APPRO	DEVELOPMENT NO	Q/M
2-7045				6/4/65	164357A							
CARD CODE	APPROVAL	DATE										
4642	GHM	2-24-65									5804642	

SHEET 8 OF 8

RESTRICTED

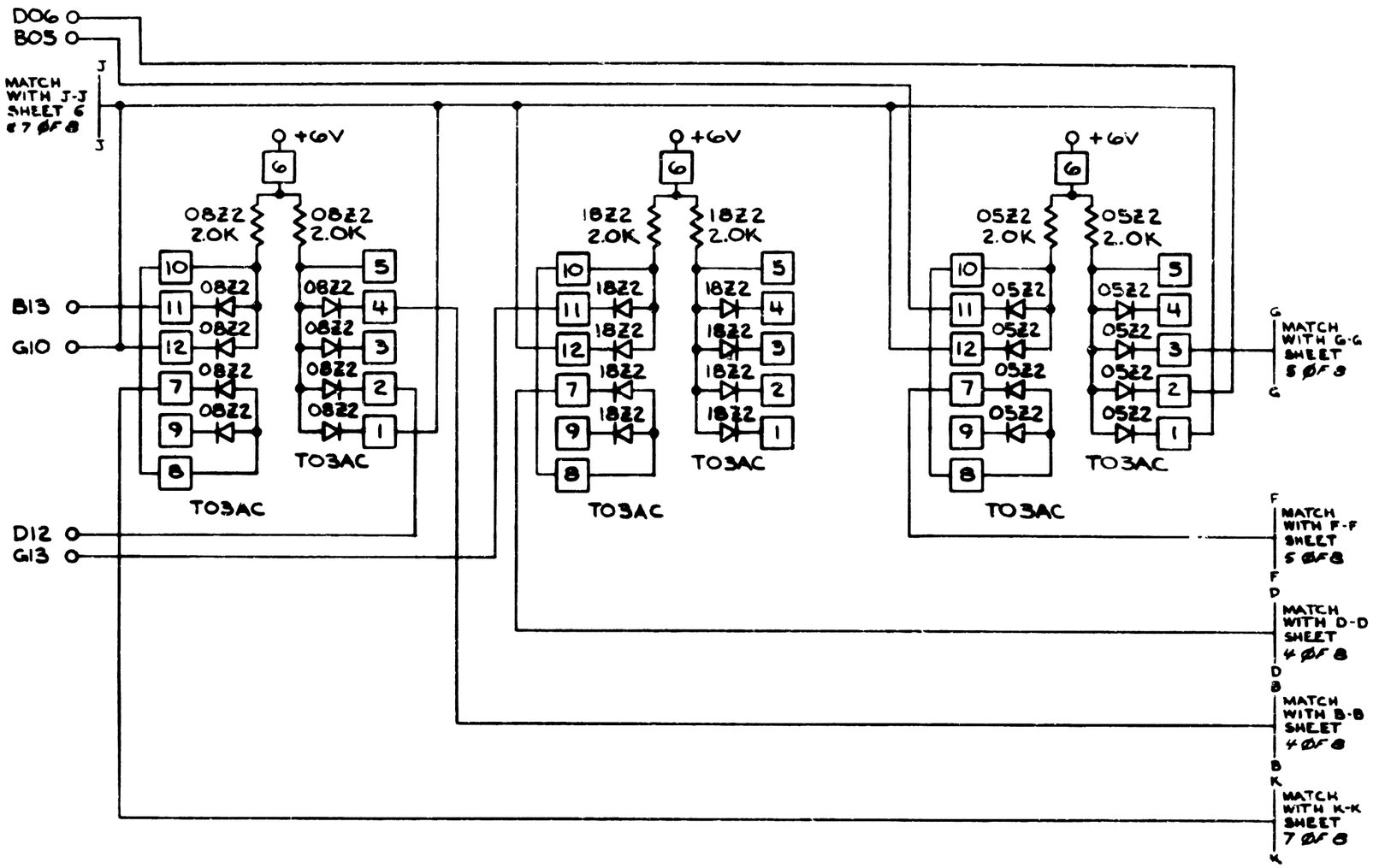

INTERNATIONAL BUSINESS MACHINES CORP					
NAME	CARD ASM - 4-WAY = FUNNEL = CARD				
DESIGN	ADC	3-6-65	TYPE	2044	
DETAIL	ADC	3-6-65	SCALE	NONE	
CHECK	ADC	3-6-65	DRAW		
APPRO	GHM	2-24-65	CHECK	IDI	3-11-65

5804642 C