FORM 2 7045-6 (8-63)

STANDARDS CODE	CIRCUIT AND PACKAGING STANDARD		SYM	DATE	CHANGE NO	TECH APPRO	SYM	DATE	CHANGE NO	TECH APPRO	DEVELOPMENT NO
2-7045				5-15-65	1637964						SI16259
CARD CODE	APPROVAL	DATE									5804644
4644	GHM	4-2-65									

SHEET 6 OF 9

RESTRICTED

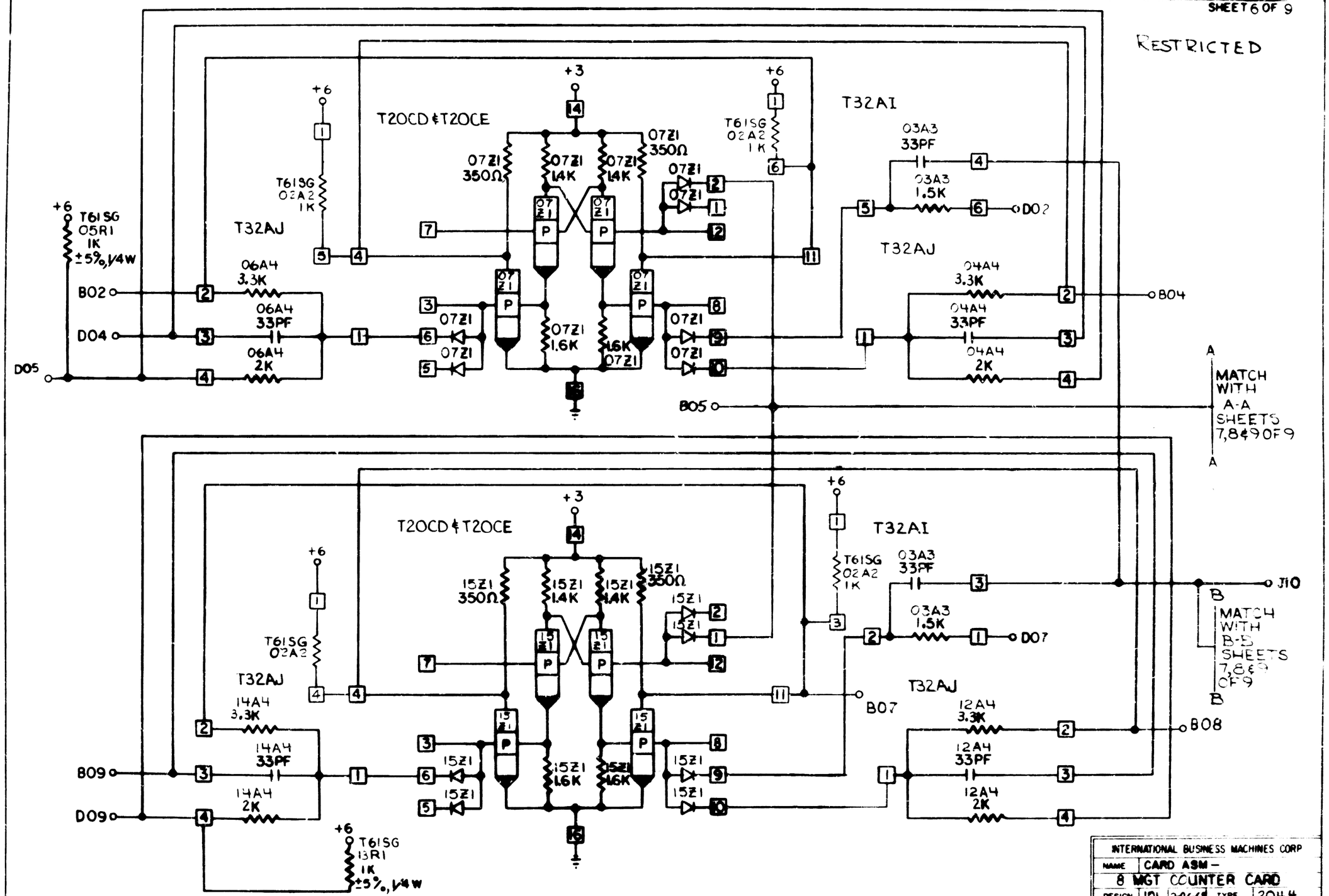

INTERNATIONAL BUSINESS MACHINES CORP				
NAME	CARD ASM — 8 MGT COUNTER CARD			
DESIGN	IDI	2-26-65	TYPE	2044
DETAIL	IDI	2-26-65	SCALE	NONE
CHECK	IDI	2-26-65	DRAW	
APPRO	GHM	4-2-65	CHEK	3-11-65

5804644 C