STANDARDS CODE	CIRCUIT AND PACKAGING STANDARD		SYM	DATE	CHANGE NO	TECH APPRO	SYM	DATE	CHANGE NO	TECH APPRO	DEVELOPMENT NO	Q/M
2-7046					1638464A							
CARD CODE	APPROVAL	DATE		10JUL68	1649498							
4645	GHM	3-31-68		11JAN69	1661995C						5804645	

SHEET 6 OF 9

RESTRICTED

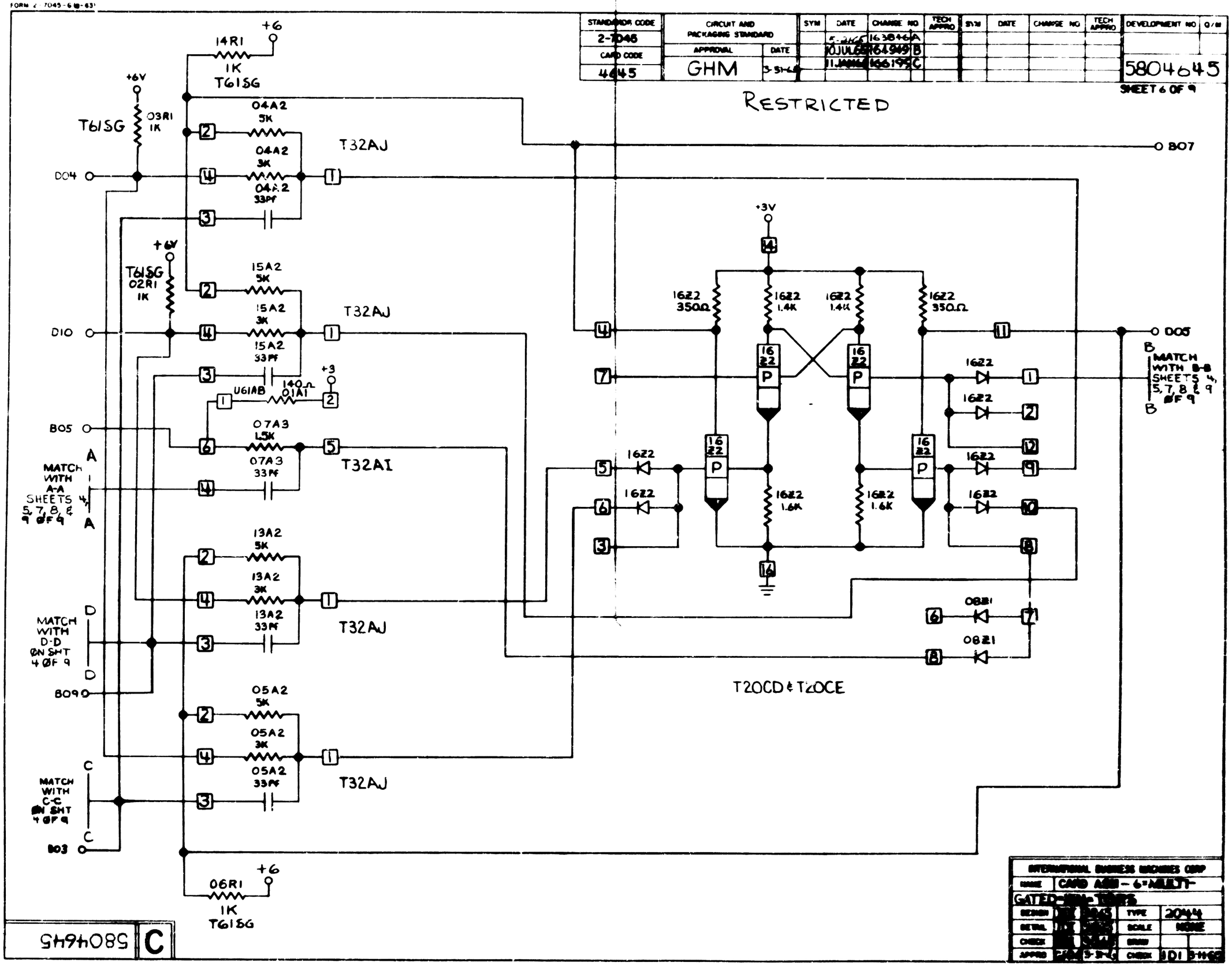

INTERNATIONAL BUSINESS MACHINES CORP	
NAME	CARD ASSY - 6-MULTI-
GATED-[illegible]	
DESIGN	TYPE 2044
DETAIL	SCALE NONE
CHECK	DRAW
APPRO	CHECK

5804645 C