FORM 2-7045-6 (9-63)

STANDARDS CODE	CIRCUIT AND PACKAGING STANDARD		SYM	DATE	CHANGE NO	TECH APPRO	SYM	DATE	CHANGE NO	TECH APPRO	DEVELOPMENT NO	Q/M
2-7046					163178 A							
CARD CODE	APPROVAL	DATE			164946 B						5804646	
4646	PHS				171930 C							
					171925 D							

SHEET 8 OF 15

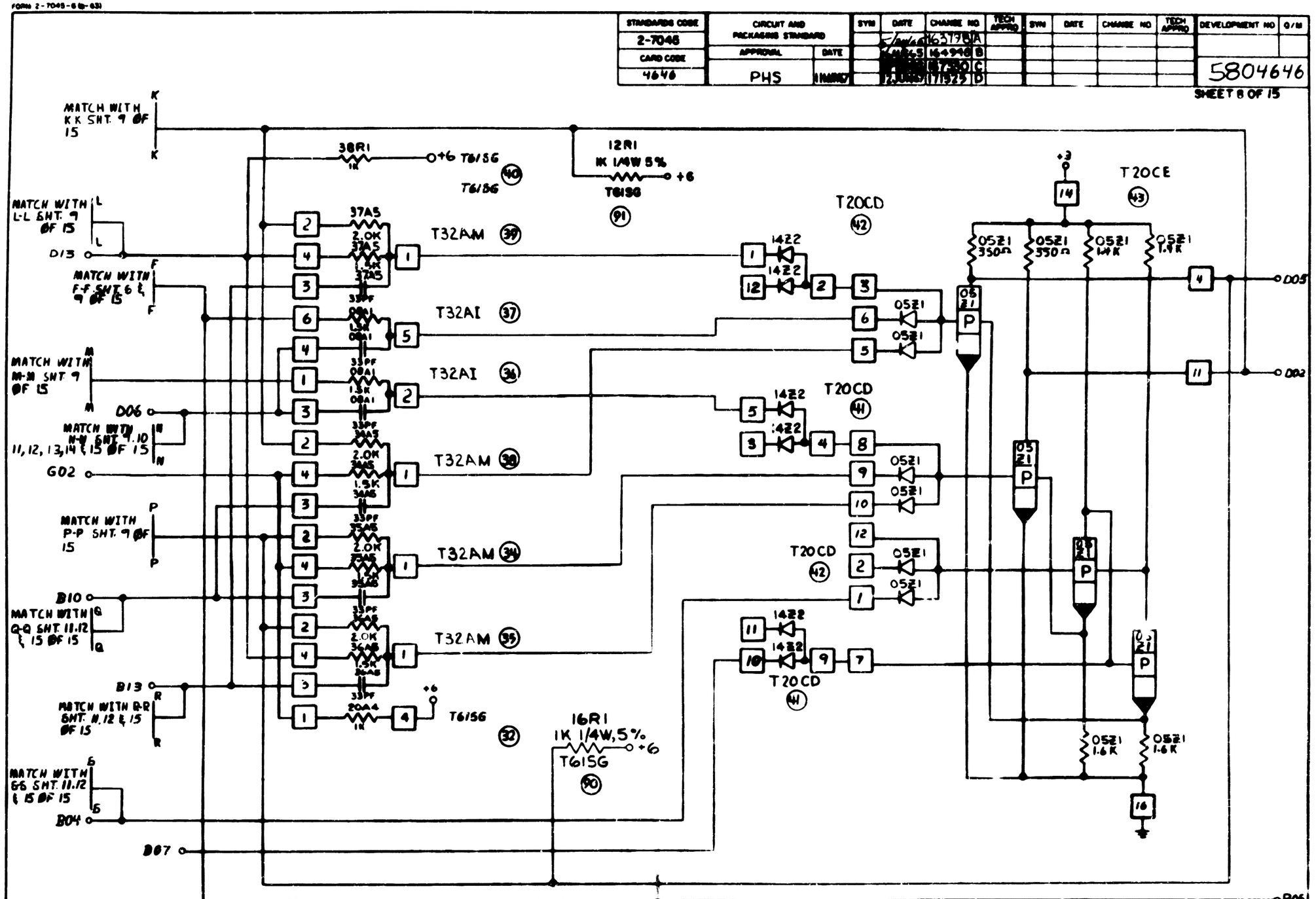

INTERNATIONAL BUSINESS MACHINES CORP				
NAME	CARD ASM - EXPONENT REGS CARD			
DESIGN	ADC 3-3-65	TYPE	2044	
DETAIL	ADC 3-3-65	SCALE	NONE	
CHECK	ADC 4-[illegible]	DRAW		
APPRO	[illegible] 3-3-65	CHECK		

5804646 C