FORM 2-7045-6 (8-63)

STANDARDS CODE	CIRCUIT AND PACKAGING STANDARD		SYM	DATE	CHANGE NO	TECH APPRO	SYM	DATE	CHANGE NO	TECH APPRO	DEVELOPMENT NO	Q/M
2-7045	APPROVAL	DATE		6-3-66	1/A390/A			10CT66	166535E		2508-5129	D
CARD CODE				[illegible]	[illegible]			15AUG66	166585F		5804648	
4648	GHM	5-24-65		[illegible]	1/A449/C							
				6JUN66	167812 D							

SHEET 7 OF 7

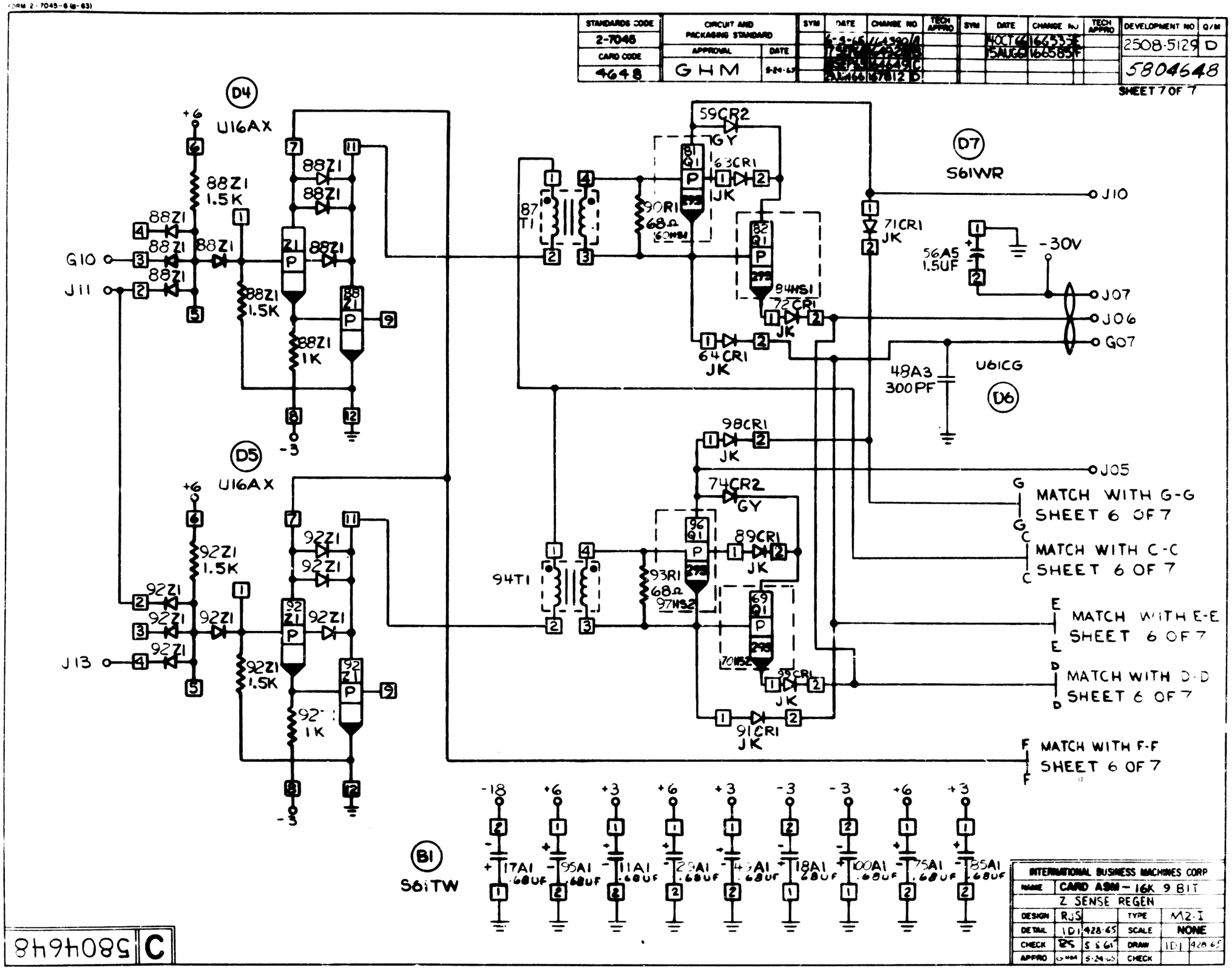

INTERNATIONAL BUSINESS MACHINES CORP					
NAME	CARD ASM - 16K 9 BIT				
	Z SENSE REGEN				
DESIGN	RJS		TYPE	M2-I	
DETAIL	IDI	4-28-65	SCALE	NONE	
CHECK	RS	5-5-65	DRAW	IDI	4-28-65
APPRO	GHM	5-24-65	CHECK		

C 5804648