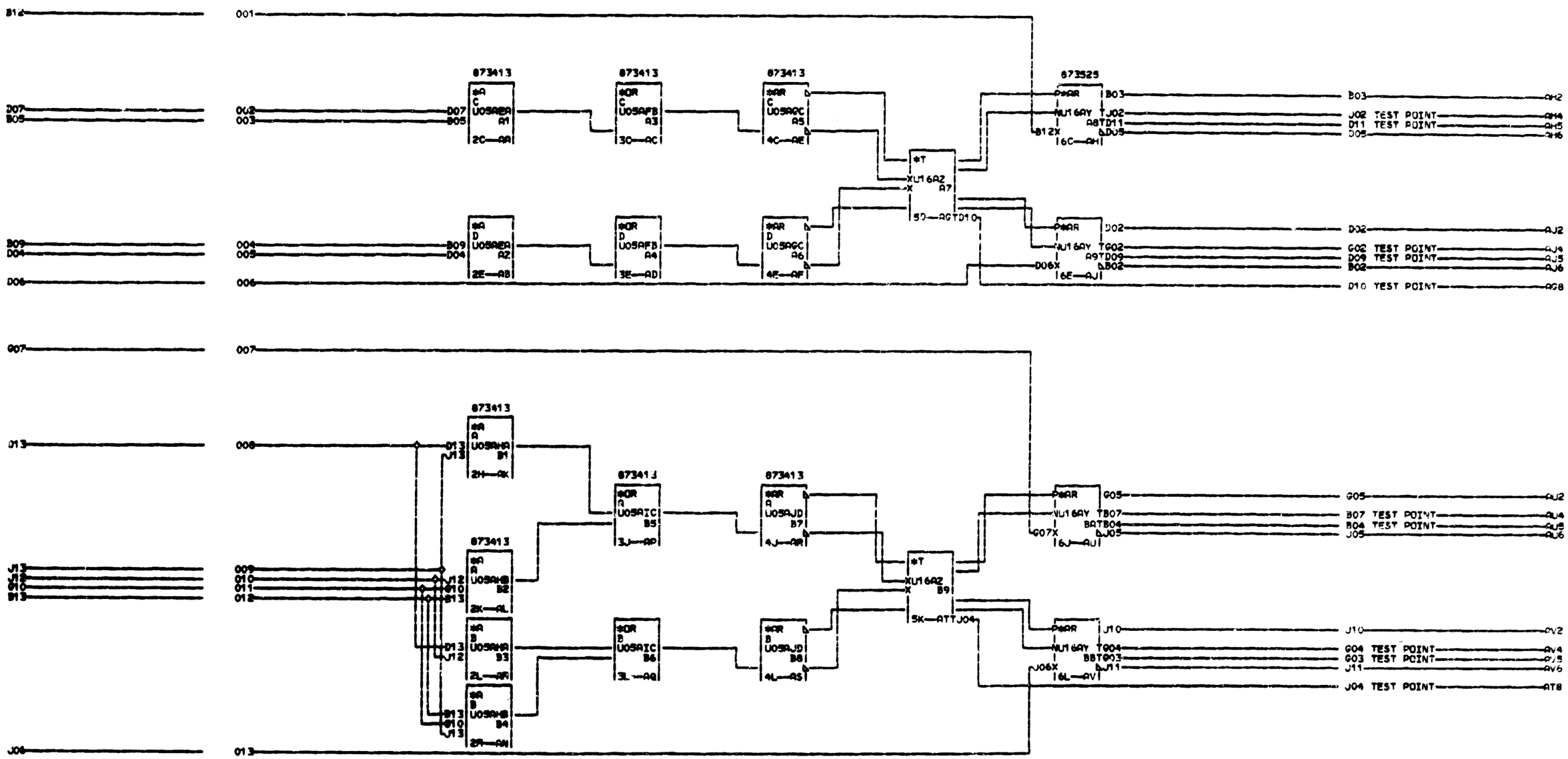

CARD SIZED 2-24PAC U05
VOLTAGE PINS
4 -300012 +6V00110011
6 +3V4J030003 -3V00060J06
4 GND00060J08
9 SPECIAL RESTRICTED
1 * INTERNAL GROUND CONNECTIONS
* D120B0000091J09
000

06-04-63 164389 A
12-20-66 166532 B

SOURCE DRIVER
DATE 12-20-66 MACH. ASSEMBLY 4
LOG 4614 FRAME 6
P.N. 5804649 4
IBM CORP. CP BLK. AW 9 1 000