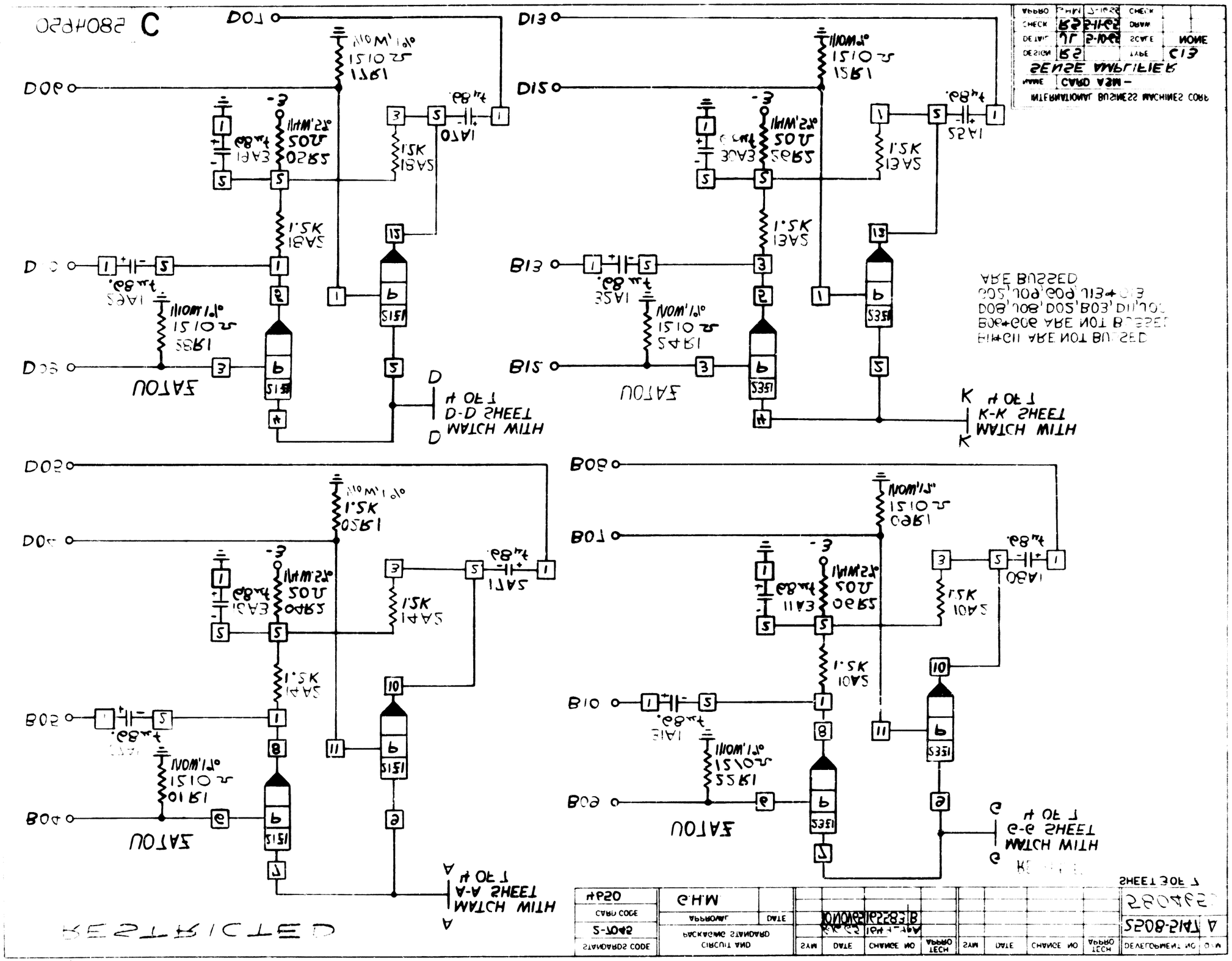
INTERNATIONAL BUSINESS MACHINES CORP.
CARD MFA
SENSE AMPLIFIER
C13
NONE
DESIGN
DRAWN
CHECK
APPRO
DATE
SCALE
TECH
MFG
CHANGE NO
DEVELOPMENT NO
A 1A12-8025
280HP50
SHEET 30E 1
HTW WATCH A-A SHEET 1 TO H
HTW WATCH D-D SHEET 1 TO H
HTW WATCH K-K SHEET 1 TO H
HTW WATCH e-e SHEET 1 TO H
CIRCUIT AND PACKAGING STANDARD
M.H.S
STANDARDS CODE
CARD CODE
RESTRICTED
C 280HP50