STANDARDS CODE	CIRCUIT AND PACKAGING STANDARD		SYM	DATE	CHANGE NO	TECH APPRO	SYM	DATE	CHANGE NO	TECH APPRO	DEVELOPMENT NO	Q/M
2-7046				15 Dec 65	DV5407-1							
CARD CODE	APPROVAL	DATE										
4653	GHM	9-13-65									5804653	

SHEET 5 OF 11

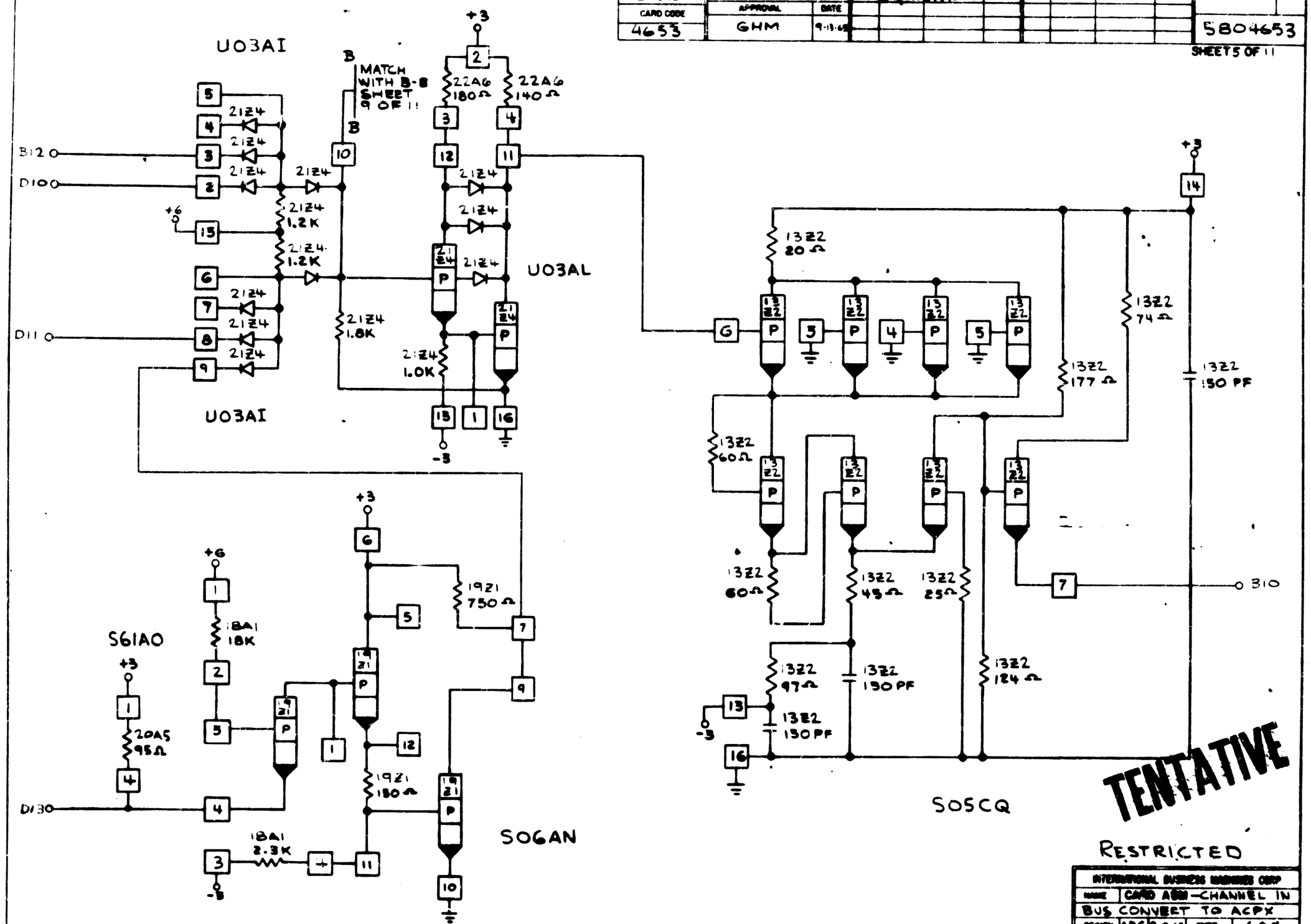

RESTRICTED

INTERNATIONAL BUSINESS MACHINES CORP				
NAME	CARD ASM—CHANNEL IN BUS CONVERT TO ACPX			
DESIGN	ADC	9-13-65	TYPE	604
DETAIL	ADC	9-13-65	SCALE	NONE
CHECK	ADC	9-16-65	DRAW	
APPRO	GHM	9-13-65	CHECK	

5804653 C