FORM 2-7045-6 (8-63)

STANDARDS CODE	CIRCUIT AND PACKAGING STANDARD		SYM	DATE	CHANGE NO.	TECH APPRO	SYM	DATE	CHANGE NO.	TECH APPRO	DEVELOPMENT NO	O/B
2-7045	APPROVAL	DATE		15 Dec 65	DVS407-1							
CARD CODE	GHM	9-13-65									5804653	
4653												
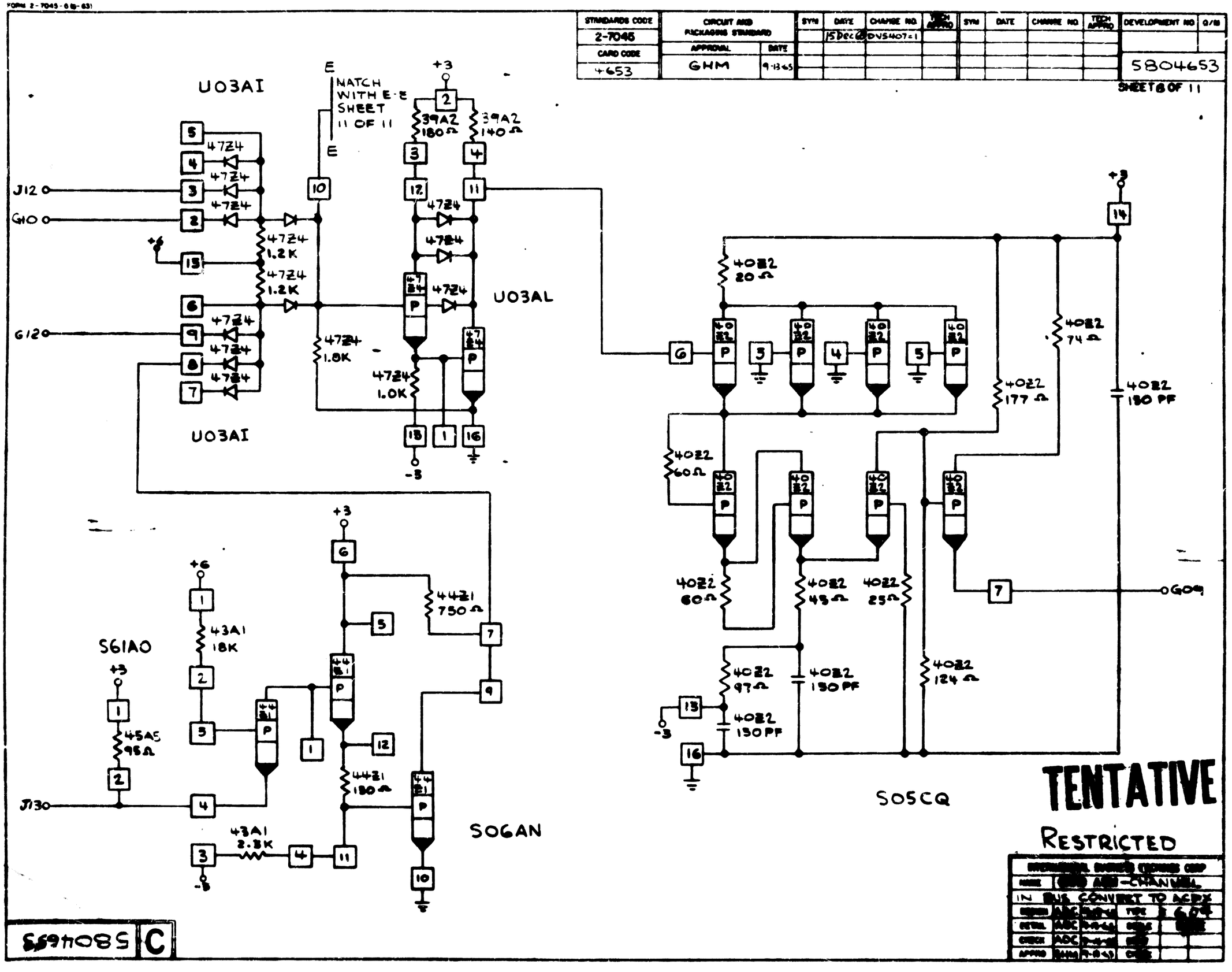
SHEET 8 OF 11