STANDARDS CODE	CIRCUIT AND PACKAGING STANDARD		SYM	DATE	CHANGE NO	TECH APPRO	SYM	DATE	CHANGE NO	TECH APPRO	DEVELOPMENT NO	B/M
2-7046	APPROVAL	DATE		10-25-66	[illegible]							
CARD CODE				1-3-66	[illegible]							
4654	GHM	9/27/65									5804654	

SHEET 10 OF 11

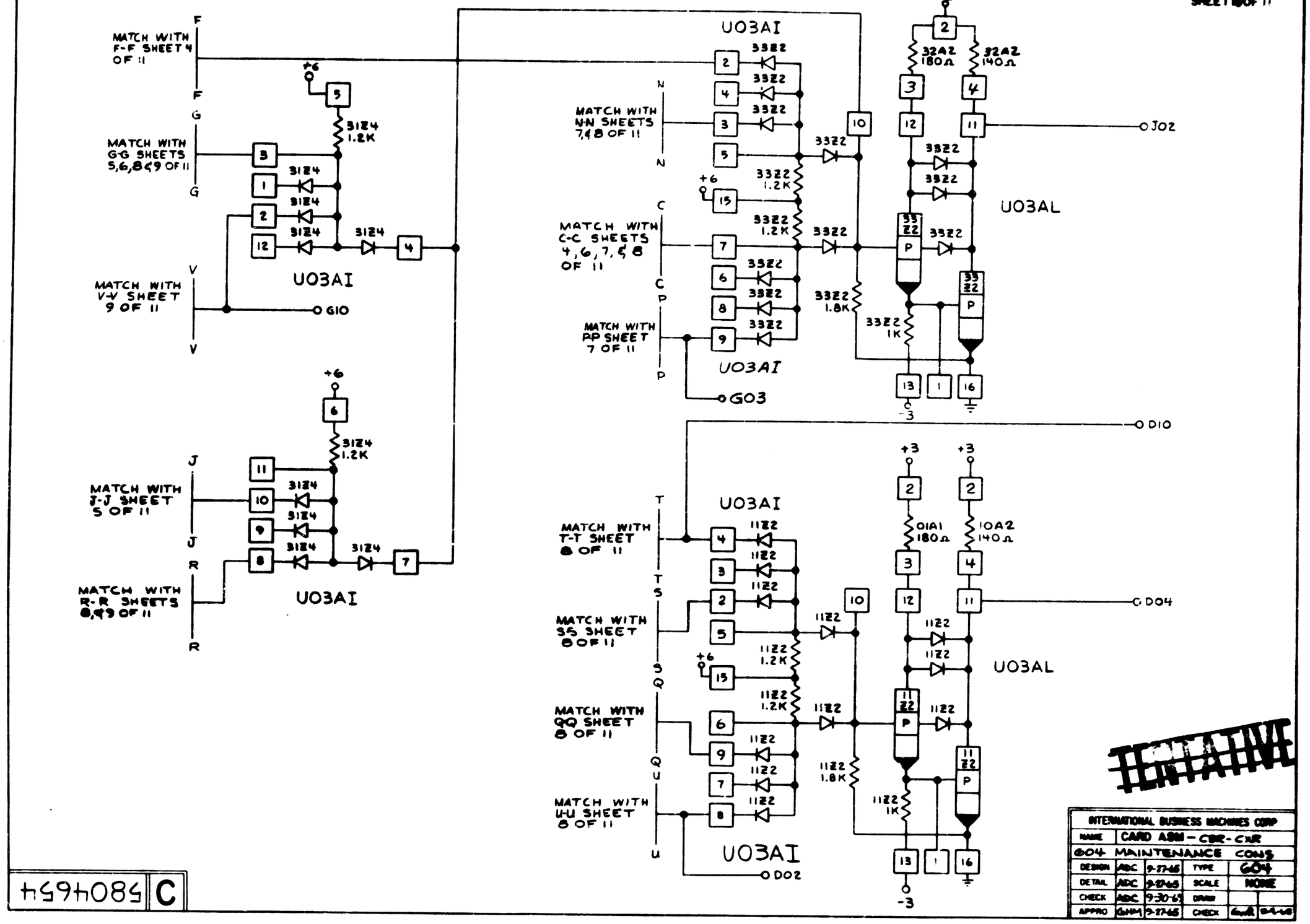
MATCH WITH F-F SHEET 4 OF 11
MATCH WITH G-G SHEETS 5,6,8 & 9 OF 11
MATCH WITH V-V SHEET 9 OF 11
MATCH WITH J-J SHEET 5 OF 11
MATCH WITH R-R SHEETS 8,9 & 9 OF 11
MATCH WITH N-N SHEETS 7,8 OF 11
MATCH WITH C-C SHEETS 4,6,7,& 8 OF 11
MATCH WITH PP SHEET 7 OF 11
MATCH WITH T-T SHEET 8 OF 11
MATCH WITH SS SHEET 8 OF 11
MATCH WITH QQ SHEET 8 OF 11
MATCH WITH U-U SHEET 8 OF 11
U03AI
U03AL
3124 1.2K
3124
3124
3124