STANDARDS CODE	B-7045			5804657
CIRCUIT APPROVAL	EME	11-25-64	STATUS	ACTIVE
LOCATION	SAN JOSE			RESTRICTED
RAW CARD NUMBER	5817027 01		HOLE PATTERN	5817027
FRONT ARTWORK	DATE	CHANGE NO.	DATE	CHANGE NO
5817027	- -			
BACK ARTWORK	12-11-64	162397		
5817027	03-08-65	163641		

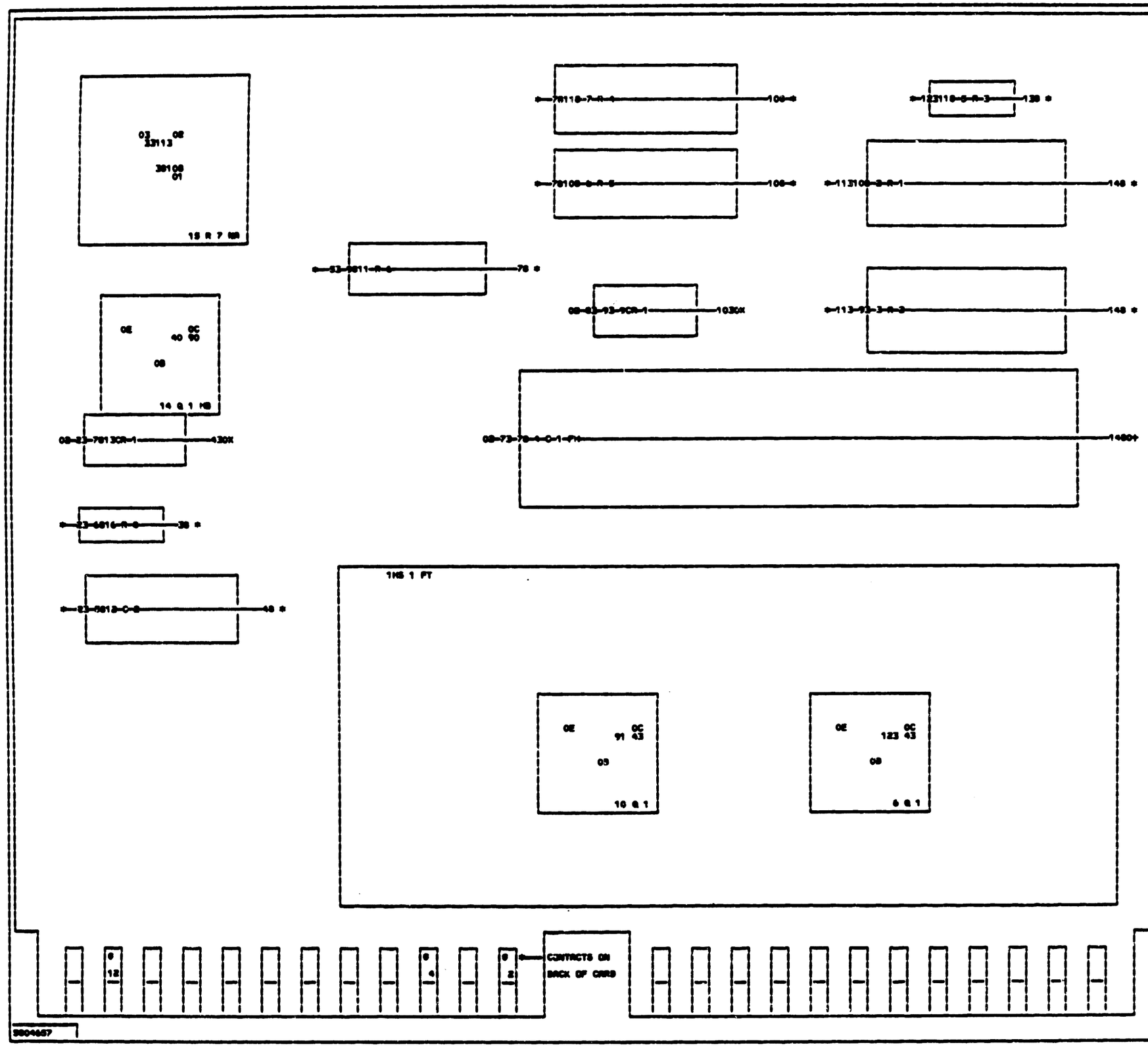

PIN	VOLT.

CODE	PART NO	VALUE				QTY
R 1	317433	560.000	1.00	+	5	1
R 2	332777	47.000	1.00	+	5	1
R 3	216480	33.000K	.25	+	5	1
R 4	5052865	2.32 K	1.		1.0	1
R 5	5052863	634.	1.		1.0	1
R 6	334923	3.600K	.50	+	5	1
R 7	492636	100.000	1.	+	5	1
R 8	216468	10.000K	.25	+	5	1
C 1	1138864	100.	U			1
C 2	491227	1.	N			1
CR 1	369388		DL			2
Q 1	369390	084 NPN				3
HS 1	483149	HEAT SINK				1
FT	483148	SPACER				2
FT	814118	INSULATOR				1
FT	483147	CLAMP				1
FT	483262	SCREW				3
MB	811399	SPACER				1
FT	483151	SI GREASE				

NOTES.

AA-ALL CIRCUITS MUST CONFORM TO ENG.SPEC. SHOWN ON SHEET 1.

AB-ASSEMBLE TO ENGINEERING SPECIFICATION 890913

AL-CARD HAS NOT BEEN DECOUPLED. 811880 IS NOT APPLICABLE.

FA-TECH LAB EVALUATION INCOMPLETE. PART SUBJECT TO WITHDRAWAL. ADDITIONAL USAGE TO BE AVOIDED

FH-DUE TO COMPONENT HEIGHT OF .370 TO .4600 THIS CARD MUST BE REMOVED PRIOR TO REMOVAL OF CARD ADJACENT TO COMPONENT SIDE.

HB-ASSEMBLE WITH P/N 811399 (TO-6) SPACER.

HA-PART MUST NOT BE SUBJECTED TO ANY LIQUID.

FT-PLACE TRANSISTORS IN MOUNTING HOLES SO THAT LEADS ARE CENTER EF.USE SPACER P/N483148 CONTEBBOTH SIDES WITH SI GREASE P/N 483151 BETWEEN TRANSISTOR AND HEAT SINK.USE INSULATOR P/N814 118.MOUNT COMPLETE ASM TO CARDUSING CLAMP P/N483147 AND SCRE W P/N483262 INSERTED FROM BACKSIDE OF CARD.DO NOT SUBJECT TO LIQUIDS.

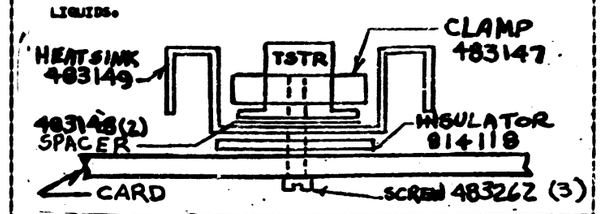

INTERNATIONAL BUSINESS MACHINES CORP.

NAME	POWER REGULATOR 30V				
DESIGN	12-07-64	TEH	TYPE	1070	
DETAIL	12-07-64	TEH	SCALE	NONE	
CHECK	12-07-64	RT	DRAW	7090	11-18-64
APPRD	12-11-64	SHS	SHEET 2 OF 3		