5804658

STANDARDS CODE

CARD CODE 5804658

SHEET 4 OF 4

RESTRICTED

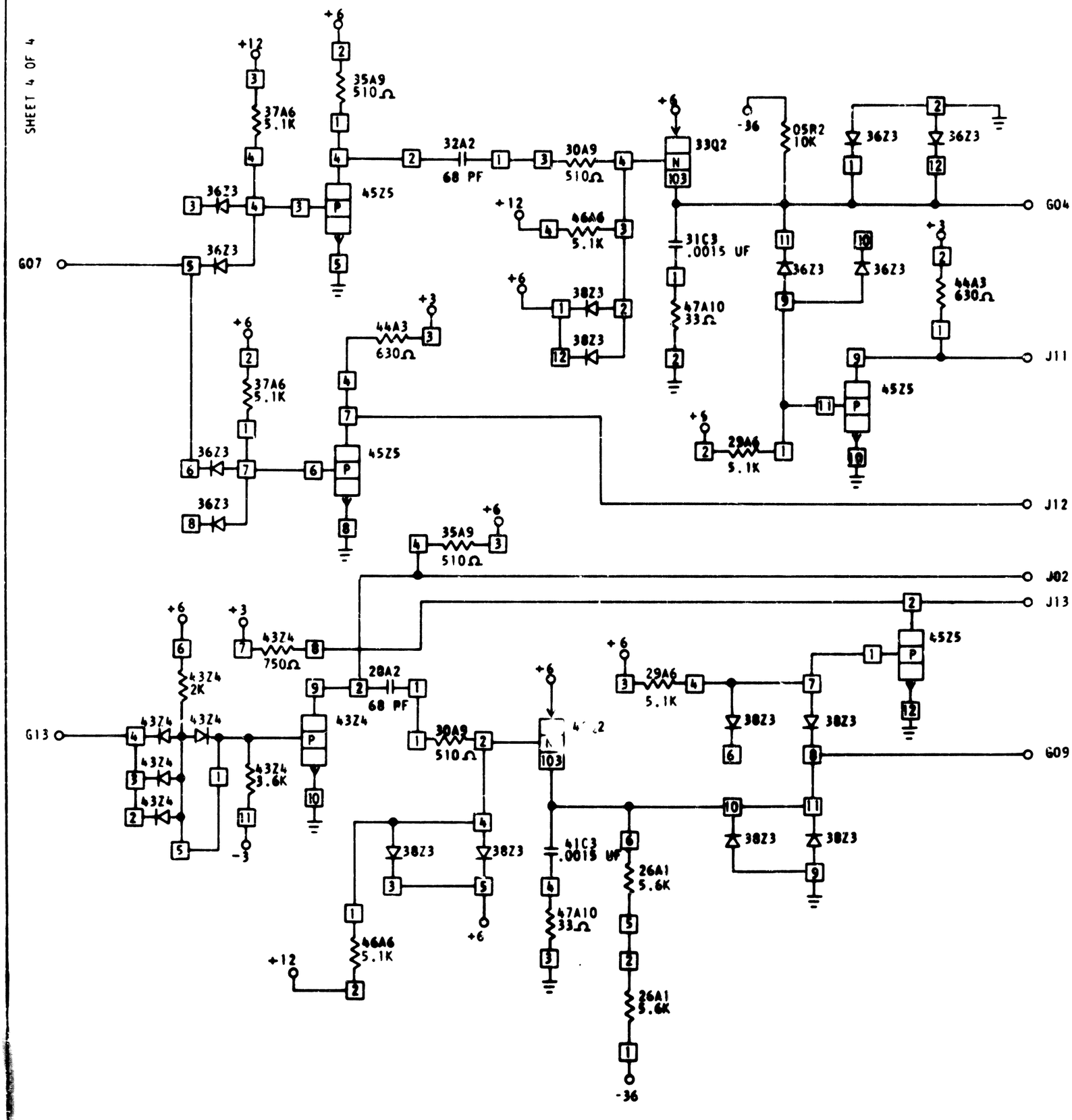


| CIRCUIT AND PACKAGING STANDARD | |
|---|---|
| APPROVAL | DATE |
| | |

| INTERNATIONAL BUSINESS MACHINES CORP. | DATE | CHANGE NO. | APPROVAL | DATE | CHANGE NO. | APPROVAL | DEVELOPMENT NO. |
|---|---|---|---|---|---|---|---|
| NAME ZERO'S DET & GAP SENSOR | 10-20-64 | 161875 A | | | | | SS507 |
| DESIGN / MODEL | 3-10-65 | 163643 B | | | | | |
| DETAIL / SCALE | | | | | | | |
| CHECK / DRAW FD 10-9-4 | | | | | | | 5804658 |
| APPRO / CHECK HK 12-4 | | | | | | | |

5804658

C